规格承认书
Spec for approval

客户名称：

我司料号：

贵司料号：

软件版本：

承认签章					
佳利承认			客户承认		
拟制	审核	批准	拟制	审核	批准

地址：
总公司：浙江省嘉兴市经济开发区塘汇工业园区正原路一号；
深圳分公司：深圳市福田区车公庙泰然工业园区 213 栋 4 楼 C 座

ZYM-BT52 Module

CSR BC57E687C

Rev.1.0

Nov 2011

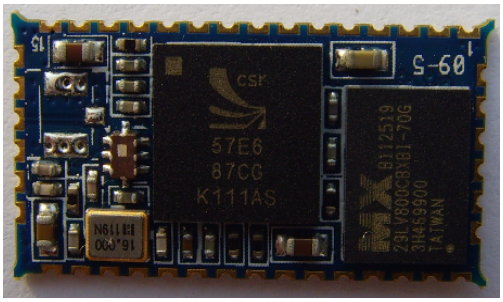

8M FLASH FOR EXAMPLE

Device Features

- A small and cost effective Bluetooth® System
- Bluetooth® specification v2.1 compliant
- Class 2, up to 10-meter range
- Complete 2.4GHz Bluetooth® System
- Power management: low power 1.8V operation for Bluetooth® core
- Compact size: 23.2mm*12mm*2.0mm
- Bluetooth® Profile Supported: HSP, HFP, A2DP ,AVRCP, OPP,PBAP
- Built in 16-bit Stereo Codec- 92dB SNR for DAC
- External antenna
- On-board flash memory (8Mbits/16Mbits/32Mbits)
- Optional echo cancellation software library
- Support multiple connections
- Support for 802.11 Co-existence
- Surface mount module for embedded applications
- Rewritable flash memory for easy upgrade route
- Custom firmware production available

General Description

The ZYM-BT52 V1.0 module from GLEAD is a complete Bluetooth® solution.It is built on CSR BC05 MultiMedia External Core and 8Mbit/16Mbit/32Mbit Flash memory.It's a short range,compact and cost effective module. Be able to be embedded into your any electronics devices which need Bluetooth® connection,such as PND, Car Audio, Home Audio, Car kit, Handsfree applications and so on.

The ZYM-BT52 V1.0 module is a power class2 Bluetooth® device, and is in compliance with version 2.1 of the Bluetooth® specification. It includes CSR BC05 MultiMedia Core and 8Mbit/16Mbit/32Mbit Flash memory, a radio front-end, antenna interface, supporting circuitry, together with some higher-level software protocols and applications such as L2CAP, SDP, GAP, HSP, HFP, A2DP ,AVRCP,OPP and PBAP resided in the flash memory.

Applications

- Stereo Bluetooth® headset/headphone
- Automotive car kit applications
- Personal Navigation Device
- PDAs and other portable terminals
- MP3 headset
- High-end noise cancellation mono headset
- AV Dongle

Content

System Architecture

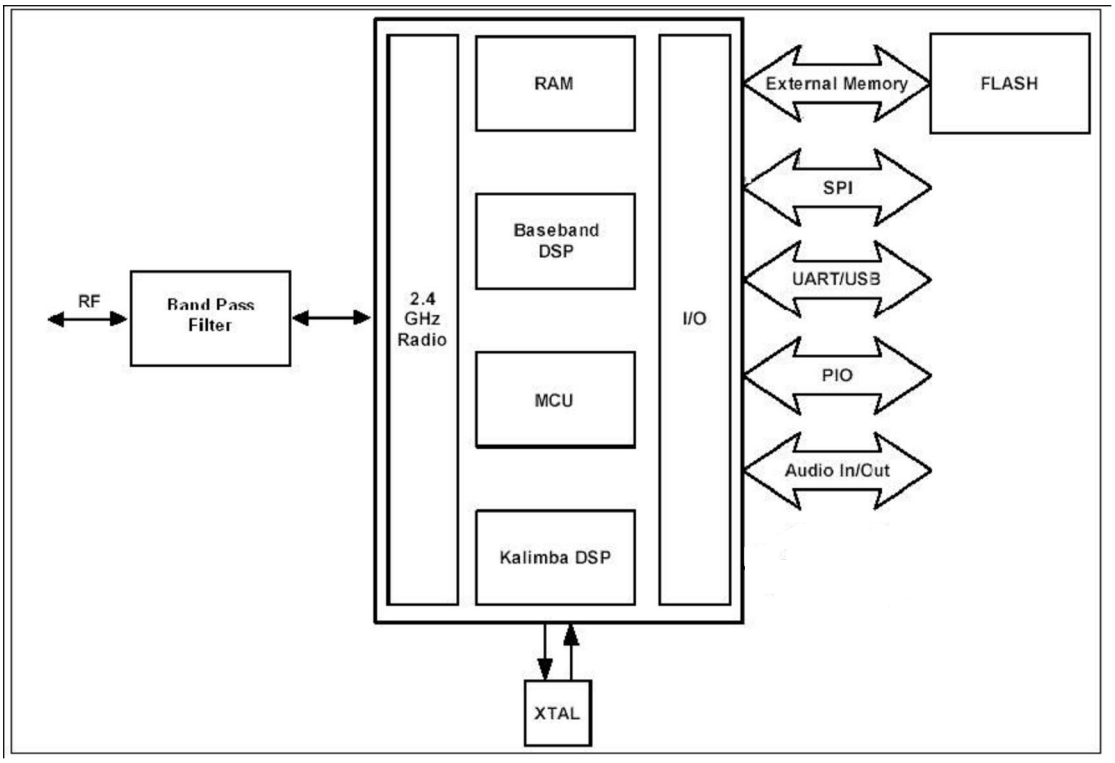

Specifications

Operating Frequency Band	2.4GHz ~ 2.48GHz unlicensed ISM band
Bluetooth Specification	V2.1
Output Power Class	Class 2
Operating Voltage	3.3V
Host Interface	USB 1.1 or UART
Audio Interface	Analog
Flash Memory Size	8Mbits/16Mbits/32Mbits
Dimension	23.2mm*12mm*2.0mm

NOTES:Specifications are subject to change without prior notice

Electrical Characteristics

Absolute Maximum Rating	Min	Max
Storage Temperature	-40 °C	+105 °C
I/O Voltage Supply (VCC)	-0.30V	+3.60V

Recommended Operating Conditions	Min	Max
Operating Temperature Range	-40 °C	+85 °C
I/O Voltage Supply (VCC)	3.0V	3.6V
Core Supply Voltage, (VDD)	1.42V	1.57V

Test Condition: VCC = 3.3V; f = 2.45GHz; T=20°C

Transmitter Performance

Temperature: 2 ℃

RF Characteristics, VDD = 1.5V		Min	Typ	Max	Bluetooth Specification	Unit
Maximum RF transmit power[a] [b] [c]		-	4	-	-6 to 4[d]	dBm
RF power variation over temperature range with compensation enabled[e]		-	±0.5	-	-	dB
RF power variation over temperature range with compensation disabled[e]		-	±2.5	-	-	dB
RF power control range		16	24	-	≥16	dB
RF power range control resolution[f]		-	0.5	-	-	dB
20dB bandwidth for modulated carrier		-	940	1000	≤1000	kHz
ACP[g] [h]	$F = F_0 \pm 2MHz$	-	-36	-20	≤-20	dBm
	$F = F_0 \pm 3MHz$	-	-45	-40	≤-40	dBm
	$F = F_0 \pm > 3MHz$	-	<-50	-40	≤-40	dBm
$\Delta f1_{avg}$ Maximum modulation		140	165	175	$140<f1_{avg}<175$	kHz
$\Delta f2_{max}$ Minimum modulation		115	142	-	≥115	kHz
$\Delta f1_{avg}/\Delta f2_{avg}$		0.80	0.92	-	≥0.80	-

RF Characteristics, VDD = 1.5V	Min	Typ	Max	Bluetooth Specification	Unit
Initial carrier frequency tolerance[i]	-75	6	75	±75	kHz
Drift rate	-	6	20	≤20	kHz/50μs
Drift (single slot packet)	-25	8	25	≤25	kHz
Drift (five slot packet)	-40	10	40	≤40	kHz
2nd Harmonic content	-	-32[j]	-	-	dBm
3rd Harmonic content	-	-32[j]	-	-	dBm

[a] Results are referenced to the single ended port of the balun.
[b] The BlueCore5-Multimedia External firmware maintains the transmit power within Bluetooth v2.1 + EDR specification limits.
[c] Measurement made using appropriate PS Key settings.
[d] Class 2 RF transmit power range, Bluetooth v2.1 + EDR specification.
[e] Parameters depend on matching circuit used and behaviour over temperature. These parameters may be beyond CSR's direct control.
[f] Resolution guaranteed over the range -5dB to -25dB relative to maximum power for Tx Level > 8dBm.
[g] Measured at F_0 = 2441MHz.
[h] BlueCore5-Multimedia External guaranteed to meet ACP performance in Bluetooth v2.1 + EDR specification.
[i] Ignores any frequency error in the reference.
[j] Filter will attenuate the harmonics

Receiver Performance

Temperature: 2 ℃

Radio Characteristics, VDD = 1.5V		Modulation	Min	Typ	Max	Bluetooth Specification	Unit
Sensitivity at 0.01% BER[a]	Ch 0	π/4 DQPSK	-	-93	-70	≤-70	dBm
	Ch 39		-	-93	-70		
	Ch 78		-	-92	-70		
	Ch 0	8DPSK	-	-85	-70	≤-70	dBm
	Ch 39		-	-85	-70		
	Ch 78		-	-84	-70		
Maximum received signal at 0.1% BER		π/4 DQPSK	-20	>-10	-	≥-20	dBm
		8DPSK	-20	>-10	-	≥-20	dBm
C/I co-channel at 0.1% BER[b] [c]		π/4 DQPSK	-	10	13	≤13	dB
		8DPSK	-	18	21	≤21	dB
Adjacent channel selectivity C/I[b] [c]	$F = F_0 + 1MHz$	π/4 DQPSK	-	-9	0	≤0	dB
		8DPSK	-	-2	5	≤5	dB
	$F = F_0 - 1MHz$	π/4 DQPSK	-	-10	0	≤0	dB
		8DPSK	-	-5	5	≤5	dB
	$F = F_0 + 2MHz$	π/4 DQPSK	-	-25	-20	≤-20	dB
		8DPSK	-	-22	-13	≤-13	dB
	$F = F_0 - 2MHz$	π/4 DQPSK	-	-41	-30	≤-30	dB
		8DPSK	-	-34	-25	≤-25	dB
	$F = F_0 - 3MHz$	π/4 DQPSK	-	-46	-40	≤-40	dB
		8DPSK	-	-38	-33	≤-33	dB
	$F = F_0 + 5MHz$	π/4 DQPSK	-	-48	-40	≤-40	dB
		8DPSK	-	-41	-33	≤-33	dB
	$F = F_{Image}$	π/4 DQPSK	-	-12	-7	≤-7	dB
		8DPSK	-	-12	-0	≤0	dB

[a] Dirty transmitter used.

[b] BlueCore5-Multimedia External is guaranteed to meet the C/I performance as specified by the Bluetooth v2.1 + EDR RF Test specification.

[c] Measured at F_0 = 2441MHz. However, depending on crystal frequency and channel number, then image may switch to the opposite side of the carrier. When this occurs, $F_{Image} = F_0$ - 3MHz and the offsets in the table equations associated with C/I are also reversed.

Pin Configurations

Pin	Symbol	I/O Type	Description
1	GND	Ground	Ground
2	RESETB	CMOS input with weak internal pull-up	Reset if low. Input debounced so must be low for >5ms to cause a reset
3	SPI_CLK	input with weak internal pull-down	Serial Peripheral Interface clock
4	SPI_MISO	CMOS output, tri-state, with weak internal pull-down	Serial Peripheral Interface output
5	SPI_MOSI	CMOS input, with weak internal pull-down	Serial Peripheral Interface input
6	SPI_CSB	CMOS input with weak internal pull-up	Chip select for Synchronous Serial Interface active low
7	PIO10	Bi-directional with programmable strength internal pull-up/down	Programmable input/output line
8	PIO11	Bi-directional with programmable strength internal pull-up/down	Programmable input/output line
9	PIO5	Bi-directional with programmable strength internal pull-up/down	Programmable input/output line
10	PIO3	Bi-directional with programmable strength internal pull-up/down	Programmable input/output line
11	PIO2	Bi-directional with programmable strength internal pull-up/down	Programmable input/output line
12	PIO0	Bi-directional with programmable strength internal pull-up/down	Programmable input/output line
13	PIO1	Bi-directional with programmable strength internal pull-up/down	Programmable input/output line
14	AUX_DAC	Analogue	Voltage DAC output
15	GND	Ground	Ground
16	MIC_BIAS	Analogue	Microphone Bias
17	RF_GND	RF Ground	RF Ground
18	RF_IN	Analogue	Transceiver input/output line
19	RF_GND	RF Ground	RF Ground
20	AIO1	Bi-directional	Analogue Programmable input/output line
21	AIO0	Bi-directional	Analogue Programmable input/output line
22	GND	Ground	Ground
23	MIC_LP	Analogue	Microphone input positive
24	MIC_LN	Analogue	Microphone iput negative
25	SPK_LN	Analogue	Speaker output negative (left side)
26	SPK_LP	Analogue	Speaker output positive (left side)
27	SPK_RN	Analogue	Speaker output negative (right side)

28	SPK_RP	Analogue	Speaker output positive (right side)
29	PIO13	Bi-directional with programmable strength internal pull-up/down	Programmable input/output line
30	3V3	3.3v power input	3.3v power input
31	USB_D+	Bi-directional	USB data plus with selectable internal 1.5Kohm pull-up resistor
32	USB_D-	Bi-directional	USB data minus
33	GND	Ground	Ground
34	PIO14	Bi-directional with programmable strength internal pull-up/down	Programmable input/output line
35	PIO9	Bi-directional with programmable strength internal pull-up/down	Programmable input/output line
36	PIO4	Bi-directional with programmable strength internal pull-up/down	Programmable input/output line
37	GND	Ground	Ground
38	UART_TX	Bi-directional CMOS output, tri-state, with weak internal pull-up	UART data output
39	UART_RX	CMOS input with weak internal pull-down	UART data input
40	PIO8	Bi-directional with programmable strength internal pull-up/down	Programmable input/output line
41	PIO7	Bi-directional with programmable strength internal pull-up/down	Programmable input/output line
42	PIO6	Bi-directional with programmable strength internal pull-up/down	Programmable input/output line

Mechanical Drawing

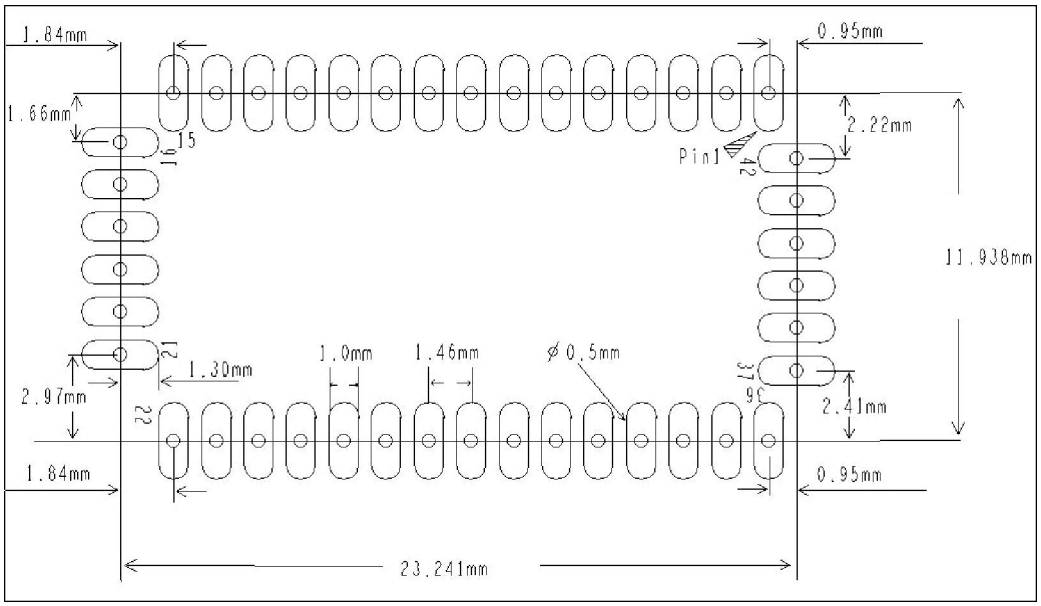

Reference Design

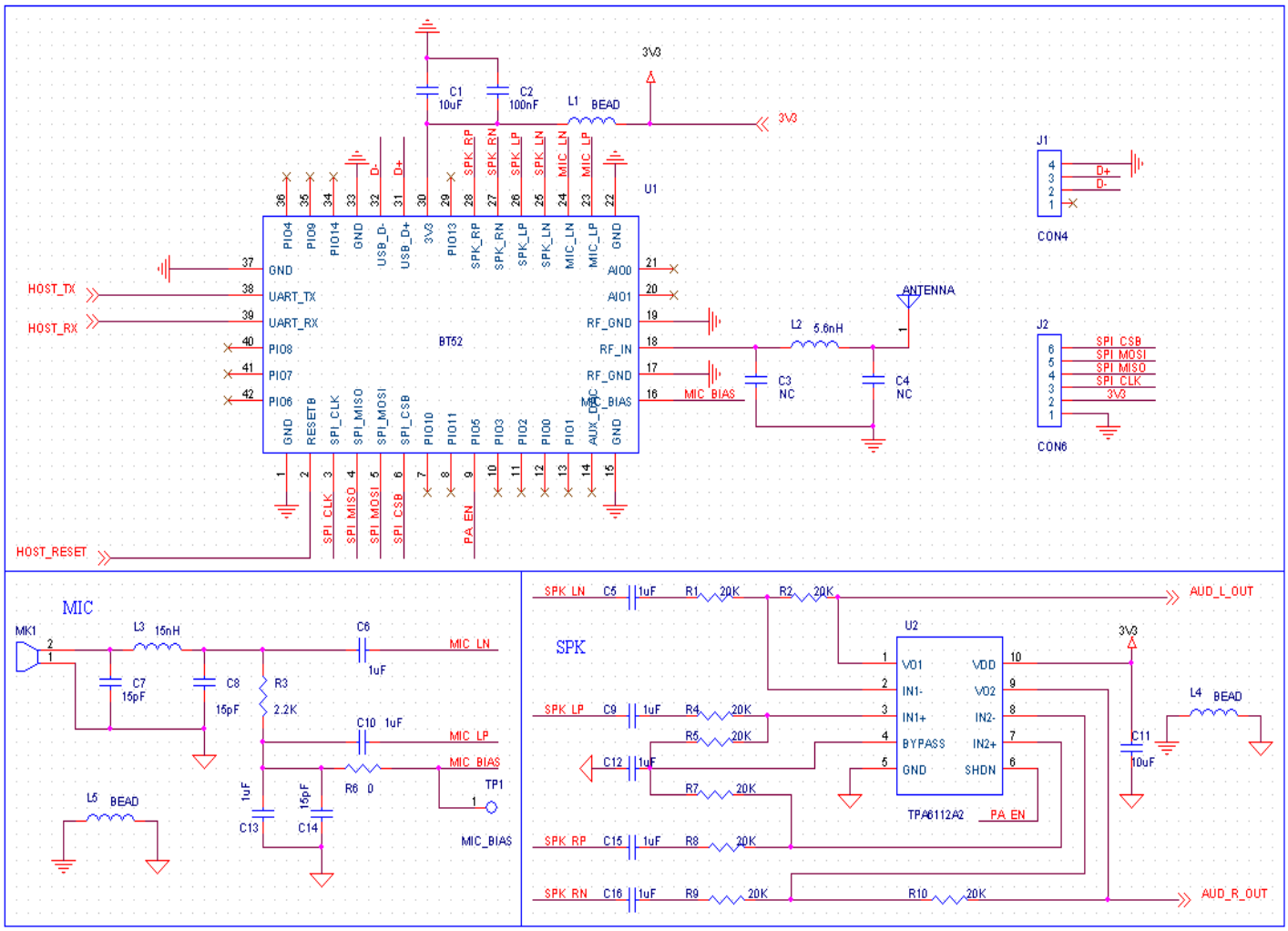

Document Reference

Document	Reference, Date
Core Specification of the Bluetooth System	v2.1 + EDR, 26 July 2007
Test Suite Structure (TSS) and Test Purposes (TP) System Specification 1.2/2.0/2.0 + EDR/ 2.1/2.1 + EDR	RF.TS/2.1.E.0, 27 December 2006
Universal Serial Bus Specification	v2.0, 27 April 2000
Selection of I²C EEPROMS for Use with BlueCore	bcore-an-008P, 30 September 2003
IC Packing and Labelling Specification	CS-112584-SPP, January 2007
Moisture / Reflow Sensitivity Classification for Nonhermitic Solid State Surface Mount Devices	IPC / JEDEC J-STD-020
Electrostatic Discharge (ESD) Sensitivity Testing Human Body Model (HBM)	JESD22-A114
BlueCore® 5-Multimedia External Performance Specification	CS-121698-SPP, 2008
BlueCore5 Charger Description and Calibration Procedure Application Note	CS-113282-ANP, 2007
BlueCore5-Multimedia External Recommendations for ESD Protection	CS-114058-ANP, 2007
Typical Solder Reflow Profile for Lead-free Device	CS-116434-ANP, 2007
Bluetooth and IEEE 802.11 b/g Co-existence Solutions Overview	bcore-an-066P, May 2005
Optimising BlueCore5-Multimedia ADC Performance Application Note	CS-120059-AN, 2008