SMT Connectors

FFC/FPC Overview F-2
0.25mm (.010") Pitch
ZIF Connectors Easy-On™ Type F-3
0.30mm (.012") Pitch
ZIF Connectors Easy-On Type ..... F-3 to F-7
0.50mm (.020") Pitch
ZIF Connectors ..... F-7 to F-10
ZIF Connectors Easy-On Type ..... F-11 to F-13
ZIF Connectors BackFlip™ Actuator F-12
Non-ZIF Connectors F-13
ZIF Connectors Easy-On Type for LVDS F-14
ZIF Connectors Easy-On Dust Cover Type F-15
1.00mm (.039") Pitch
ZIF Connectors ..... F-15 to F-16
Non-ZIF Connectors ..... F-17 to F-18

Through Hole Connectors

1.25mm (.049") Pitch
ZIF Connectors ..... F-18 to F-19
Non-ZIF Connectors ..... F-19 to F-20
FFC/FPC Cable Connectors – SL™ ..... F-20 to F-22

Flat Flex Cable Jumpers—Premo-Flex™

0.50mm (.020") Pitch ..... F-23 to F-26
1.00mm (.039") Pitch ..... F-27 to F-30
1.25mm (.049") Pitch ..... F-31 to F-34

Visit www.molex.com to access more part numbers and product information, download sales drawings, product specifications, 3D models, place sample requests, and more.

molex®
one company › a world of innovation

FFC/FPC соединители с актюаторами

Molex предлагает большое разнообразие соединителей для плоских гибких кабелей (FFC) и гибких печатных плат (FPC). В серию FFC/FPC включены соединители с актюатором с шагом 0.30, 0.50, 0.625, 1.00 и 1.25мм. Актюатор — это предустановленное в соединитель устройство, которое активирует соединение между FFC/FPC и контактами соединителя, а также защищает их от механических воздействий.

Характеристики

Актюатор обеспечивает следующие преимущества:

- Низкая степень износа — нулевое усилие сочленения контактов (ZIF) позволяет многократные сочленения с минимальным износом
- Большое усилие/маленький размер — актюатор обеспечивает фиксацию кабеля с максимальным усилием при маленьком размере
- Легкая установка — контакты ZIF обеспечивают легкую установку даже очень тонкого кабеля

Принцип действия

1

Поднимите актюатор в позицию 2 и вставьте FFC/FPC в корпус соединителя.

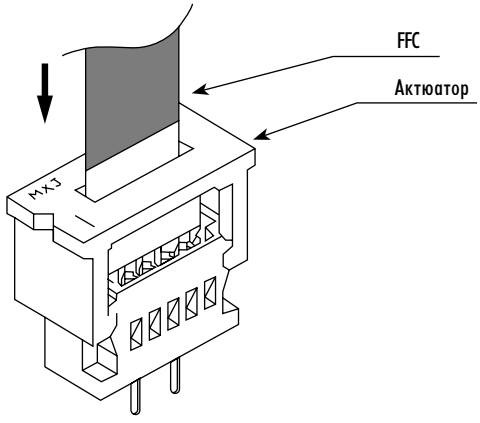

2

Нажмите на актюатор. Выступы на актюаторе переместятся к терминалам и прижмут их к контактам кабеля. Получится плотный электрический контакт между терминалом и контактной зоной кабеля.

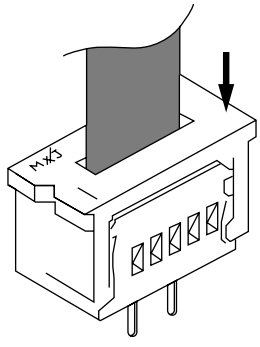

3

Чтобы отсоединить кабель просто поднимите актюатор и выньте FFC/FPC.

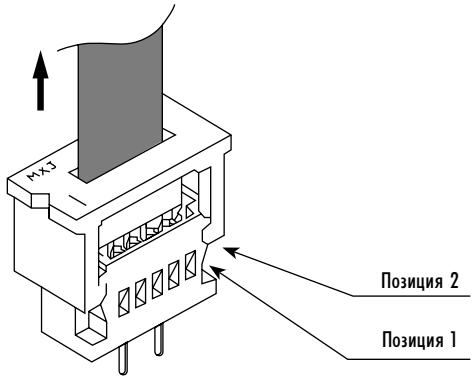

0.25mm (.010") Pitch Easy-On™ FPC Connector

502078

Right Angle, SMT Bottom Contact Style 1.00mm (.039") Mated Height

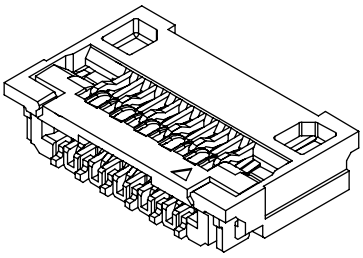

Circuits	Order No.	Lead-free
12	502078-1710	Yes
21	502078-2110	
25	502078-2510	
33	502078-3310	
39	502078-3910	
51	502078-5110	

Features and Benefits

- Sizes 17 to 51 circuits
- Easy-On actuator facilitates cable insertion
- Standard 2.0mm FPC thickness applicable

Reference Information

Product Specification: PS-502078-002
Packaging: Embossed tape
Designed In: Millimeters

Electrical

Voltage: 50V max.
Current: 0.2A max.
Contact Resistance: Odd circuits—80 milliohms max.
Even circuits—50 milliohms max.
Dielectric Withstanding Voltage: 150V AC/1 min.
Insulation Resistance: 50 Megohms min.

Physical

Housing: Glass-filled heat resistant Plastic, UL 94V-0
Actuator: Glass-filled heat resistant Plastic, UL 94-HB
Contact: Copper Alloy
Plating: Gold over Nickel
Fitting Nail: Copper Alloy, Tin over Nickel plating

0.30mm (.012") Pitch Easy-On™ BackFlip™ Type FPC Connector

502250

Right Angle, SMT Dual Contact Style 0.90mm (.035") Mated Height

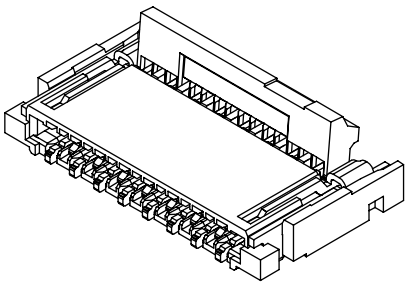

Circuits	Order No.	Lead-free
17	502250-1791	Yes
21	502250-2191	
23	502250-2391	
27	502250-2791	
33	502250-3391	

Circuits	Order No.	Lead-free
35	502250-3591	Yes
39	502250-3991	
41	502250-4191	
51	502250-5191	

Features and Benefits

- Sizes 17 to 51 circuits
- Dual contact style enables design flexibility

Reference Information

Product Specification: PS-502250-001
Packaging: Embossed tape
Designed In: Millimeters

Electrical

Voltage: 50V max.
Current: 0.2A max.
Contact Resistance: 80 milliohms max.
Dielectric Withstanding Voltage: 250V AC/1 min.
Insulation Resistance: 50 Megohms min.

Physical

Housing: Glass-filled LCP, UL 94V-0
Actuator: Glass-filled PPS, UL 94V-0
Contact: Copper Nickel Tin Alloy
Plating: Contact Area—Partial Gold over Nickel
Solder Tail Area—Partial Gold over Nickel
Fitting Nails: Phosphor Bronze, Tin over Nickel plating

0.30mm (.012") Pitch Easy-On™ BackFlip™ Type FPC Connector

501616

Right Angle, SMT Top Contact Style 1.10mm (.043") Mated Height

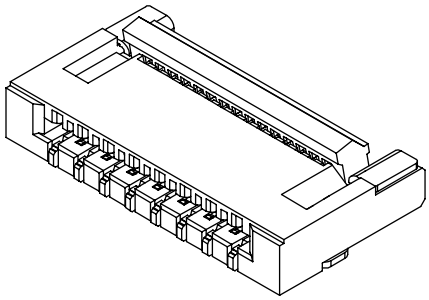

Features and Benefits

- Sizes 19 to 51 circuits
- Back-side actuator method enables easy cable insertion/extraction in very tight applications

Reference Information

Product Specification: PS-501616-002(**75)
PS-501616-003(**85)
Packaging: Embossed tape
Designed In: Millimeters

Electrical

Voltage: 50V max.
Current: 0.2A max.
Contact Resistance: 80 milliohms max.
Dielectric Withstanding Voltage: 125V AC/1 min.
Insulation Resistance: 50 Megohms min.

Physical

Housing: Gray heat resistant Polymer, UL 94V-0
Actuator: Black heat resistant Polymer, UL 94V-0
Contact: Copper Alloy
Plating: Contact Area—Partial Gold over Nickel
Solder Tail Area—Partial Gold over Nickel
Fitting Nail: Copper Alloy, Tin over Nickel plating

Circuits	Order No.	Lead-free
19	501616-1975	Yes
25	501616-2575	
27	501616-2775	
29	501616-2975	
35	501616-3585	

Circuits	Order No.	Lead-free
39	501616-3985	Yes
41	501616-4185	
45	501616-4585	
51	501616-5185	

0.30mm (.012") Pitch Easy-On™ FFC/FPC Connector

54393

Right Angle, SMT, ZIF Bottom Contact Style

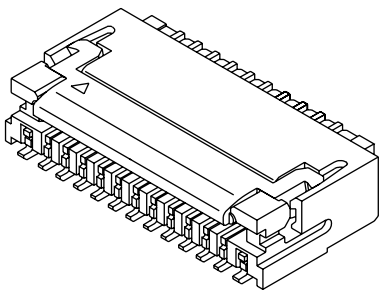

Features and Benefits

- Sizes 17 to 51 circuits
- Actuator rotates back 100 degrees for easy cable insertion
- Staggered dual-row PCB layout provides space savings and easy soldering
- Contact design includes pre-hold cable feature to help facilitate FPC insertion

Reference Information

Product Specification: PS-54393-064
Packaging: Embossed tape
Designed In: Millimeters

Electrical

Voltage: 50V max.
Current: 0.2A max.
Contact Resistance: Odd circuits—80 milliohms max.
Even circuits—40 milliohms max.
Dielectric Withstanding Voltage: 250V AC/1 min.
Insulation Resistance: 50 Megohms min.

Physical

Housing: LCP, UL 94V-0
Actuator: PPS, UL 94V-0
Contact: Phosphor Bronze
Plating: Gold over Nickel
Fitting Nail: Phosphor Bronze, Tin over Nickel Plating

Circuits	Order No.	Lead-free
17	54393-1781	Yes
21	54393-2181	
23	54393-2381	
27	54393-2781	
33	54393-3381	
39	54393-3981	
45	54393-4581	
51	54393-5181	

0.30mm (.012") Pitch Easy-On™ FPC Connector

502761

Right Angle, SMT Bottom Contact Style 0.62mm (.024") Mated Height

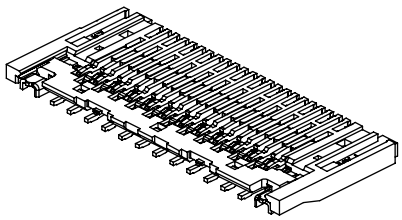

Circuits	Order No.	Lead-free
33	502761-3300	Yes
49	502761-4900	

Features and Benefits

- Sizes 33 and 49 circuits
- Ultra low profile, height 0.62mm nominal

Reference Information

Product Specification: PS-502761-001
Packaging: Embossed tape
Designed In: Millimeters

Electrical

Voltage: 50V max.
Current: 0.2A max.
Contact Resistance: 80 milliohms max.
Dielectric Withstanding Voltage: 250V AC/1 min.
Insulation Resistance: 50 Megohms min.

Physical

Housing: Glass-filled LCP, UL 94V-0
Actuator: Glass-filled LCP, UL 94V-0
Contact: Copper Nickel Tin Alloy
Plating: Contact Area—Gold over Nickel
Solder Tail Area—Gold over Nickel
Fitting Nails: Phosphor Bronze, Tin over Nickel plating

0.30mm (.012") Pitch Easy-On™ FPC Connector

501628

Right Angle, SMT Bottom Contact Style 0.90mm (.035") Mated Height

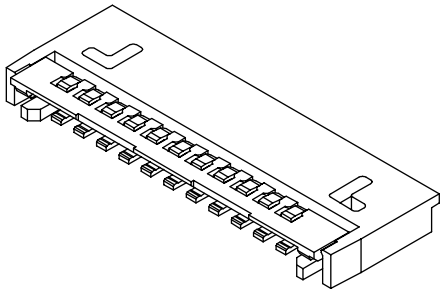

Circuits	Order No.	Lead-free
21	501628-2191	Yes
27	501628-2791	
31	501628-3191	
33	501628-3391	
35	501628-3591	
39	501628-3991	
45	501628-4591	
51	501628-5191	

Features and Benefits

- Sizes 21 to 51 circuits
- Easy-On actuator facilitates cable insertion

Reference Information

Product Specification: PS-501628-001
Packaging: Embossed tape
Designed In: Millimeters

Electrical

Voltage: 50V max.
Current: 0.2A max.
Contact Resistance: 40 milliohms max.
Dielectric Withstanding Voltage: 250V AC/1 min.
Insulation Resistance: 50 Megohms min.

Physical

Housing: Glass-filled LCP, UL 94V-0
Actuator: Glass-filled PA, UL 94V-0
Contact: Copper Alloy
Plating: Contact Area—Partial Gold over Nickel
Fitting Nail Area—Tin over Nickel

0.30mm (.012") Pitch Easy-On™ FPC Connector

54809

Right Angle, SMT, ZIF Bottom Contact Style 1.30mm (.051") Mated Height

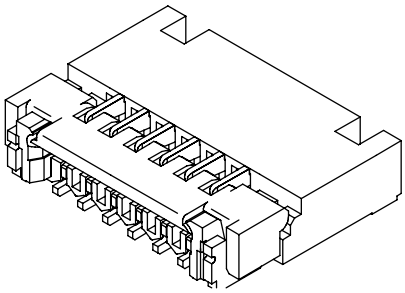

Features and Benefits

- Sizes 11 to 45 circuits
- Actuator rotates back 130 degrees for easy cable insertion
- Staggered dual-row PCB layout provides space savings and easy soldering
- Contact design includes pre-hold cable feature

Reference Information

Product Specification: PS-54809-034
Packaging: Embossed tape
Designed In: Millimeters

Electrical

Voltage: 50V max.
Current: 0.2A max.
Contact Resistance: Odd Circuits—80 milliohms max.
Even Circuits—40 milliohms max.
Dielectric Withstanding Voltage: 250V AC/1 min.
Insulation Resistance: 50 Megohms min.

Physical

Housing: LCP, UL 94V-0
Actuator: PA, UL 94V-0
Contact: Phosphor Bronze
Plating: Gold over Nickel
Fitting Nail: Phosphor Bronze, Tin over Nickel Plating

Circuits	Order No.	Lead-free
11	54809-1175	Yes
15	54809-1575	
19	54809-1975	
21	54809-2175	
25	54809-2575	
27	54809-2775	

Circuits	Order No.	Lead-free
31	54809-3175	Yes
33	54809-3375	
35	54809-3575	
39	54809-3975	
45	54809-4575	

0.30mm (.012") Pitch Easy-On™ FPC Connector

500797

Right Angle, SMT, ZIF Bottom Contact Style 1.05mm (.041") Mated Height

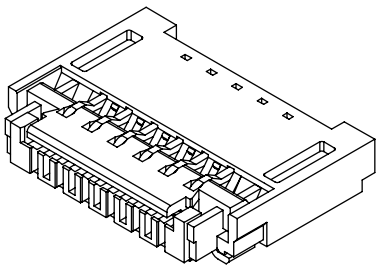

Features and Benefits

- Sizes 11 to 51 circuits
- Low profile and short width provide space savings
- Robust spring contact design
- Superior terminal design allows high retention force
- Audible click ensures cable is fully actuated

Reference Information

Product Specification: PS-500797-003
Packaging: Embossed tape
Designed In: Millimeters

Electrical

Voltage: 50V max.
Current: 0.2A max.
Contact Resistance: Odd Circuits—80 milliohms max.
Even Circuits—40 milliohms max.
Dielectric Withstanding Voltage: 250V AC/1 min.
Insulation Resistance: 50 Megohms min.

Physical

Housing: Glass-fillled LCP, UL 94V-0
Actuator: Glass-filled Nylon, UL 94V-0
Contact: Copper Alloy
Plating: Gold over Nickel
Fitting Nail: Phosphor Bronze, Tin over Nickel Plating

Circuits	Order No.	Lead-free
11	500797-1194	Yes
15	500797-1594	
17	500797-1794	
23	500797-2394	
25	500797-2594	
27	500797-2794	

Circuits	Order No.	Lead-free
31	500797-3194	Yes
33	500797-3394	
35	500797-3594	
39	500797-3994	
41	500797-4194	
51	500797-5194	

0.30mm (.012") Pitch Easy-On™ FPC Connector

501912

Right Angle, SMT Bottom Contact Style 1.80mm (.071") Mated Height

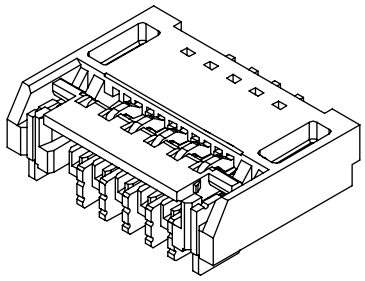

Features and Benefits

- Sizes 15 to 51 circuits
- Space under body of connector provides space for components
- LIF contact design enables temporary positioning of FPC
- Easy-On actuator for easy FPC cable insertion
- Gold plating offers good contact reliability

Reference Information

Product Specification: PS-501912-001
Packaging: Embossed tape
Designed In: Millimeters

Electrical

Voltage: 50V max.
Current: 0.2A max.
Contact Resistance: Odd circuits—80 milliohms max.
Even circuits—40 milliohms max.
Dielectric Withstanding Voltage: 250V AC/1 min.
Insulation Resistance: 50 Megohms min.

Physical

Housing: Glass-filled heat resistant Polymer, UL 94V-0
Actuator: Glass-filled heat resistant Polymer, UL 94V-0
Contact: Copper Alloy
Plating: Contact Area—Gold over Nickel
Fitting Nail Area—Tin over Nickel

Circuits	Order No.	Lead-free
15	501912-1590	Yes
21	501912-2190	
23	501912-2390	
25	501912-2590	
27	501912-2790	
33	501912-3390	
35	501912-3590	

Circuits	Order No.	Lead-free
37	501912-3790	Yes
39	501912-3990	
41	501912-4190	
45	501912-4590	
47	501912-4790	
51	501912-5190	

0.50mm (.020") Pitch FFC/FPC Connector

52559

Vertical, SMT, ZIF

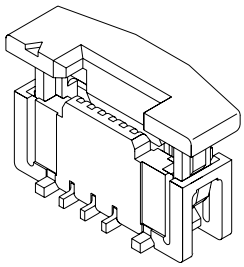

Features and Benefits

- Sizes 6 to 40 circuits
- For 0.30mm thick FFC/FPC
- Fitting nails provide PCB hold-down and strain relief for SMT tails

Reference Information

Product Specification: PS-52559-013 (XX52)
PS-52559-016 (XX54)
Packaging: Embossed tape
Designed In: Millimeters

Electrical

Voltage: 50V max.
Current: 0.5A max.
Contact Resistance: 20 milliohms max.
Dielectric Withstanding Voltage: 250V AC/1 min.
Insulation Resistance: 50 Megohms min.

Physical

Housing: Nylon, UL 94V-0
Actuator: PPS, UL 94V-0
Contact: Phosphor Bronze
Plating: Contact Area—Gold over Nickel
Solder Tail Area—Tin over Nickel
Fitting Nail: Phosphor Bronze, Tin over Nickel Plating

Circuits	Order No.		Lead-free
	Standard Packaging	High-Barrier Packaging	
6	52559-0652	52559-0654	Yes
9	52559-0952	52559-0954	
10	52559-1052	52559-1054	
12	52559-1252	52559-1254	
14	52559-1452	52559-1454	
15	52559-1552	52559-1554	
16	52559-1652	52559-1654	
20	52559-2052	52559-2054	
21	52559-2152	52559-2154	

Circuits	Order No.		Lead-free
	Standard Packaging	High-Barrier Packaging	
24	52559-2452	52559-2454	Yes
26	52559-2652	52559-2654	
27	52559-2752	52559-2754	
28	52559-2852	52559-2854	
30	52559-3052	52559-3054	
32	52559-3252	52559-3254	
36	52559-3652	52559-3654	
40	52559-4052	52559-4054	

Note: 52559-XX54 is High-Barrier (moisture protection) packaging

0.50mm (.020") Pitch FFC/FPC Connector

52745

Right Angle, SMT, ZIF Top Contact Style

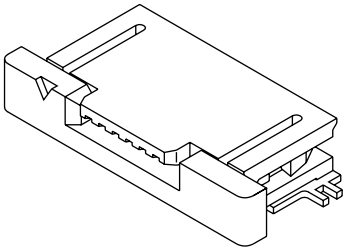

Features and Benefits

- Sizes 4 to 20 circuits
- For 0.30mm (.012") thick FFC/FPC
- Fitting nails provide PCB hold-down and strain relief for SMT tails

Reference Information

Product Specification: PS-52745-051
Packaging: Embossed tape
Designed In: Millimeters

Electrical

Voltage: 50V max.
Current: 0.5A max.
Contact Resistance: 20 milliohms max.
Dielectric Withstanding Voltage: 250V AC/1 min.
Insulation Resistance: 50 Megohms min.

Physical

Housing: Glass-filled PA, UL 94V-0
Actuator: Glass-filled PPS, UL 94V-0
Contact: Phosphor Bronze
Plating: Contact Area—Gold over Nickel
Solder Tail Area—Gold over Nickel
Fitting Nail: Phosphor Bronze, Tin over Nickel Plating

Circuits	Order No.	Lead-free
4	52745-0483	Yes
6	52745-0683	
7	52745-0783	
8	52745-0883	
10	52745-1083	
11	52745-1183	
12	52745-1283	

Circuits	Order No.	Lead-free
13	52745-1383	Yes
14	52745-1483	
15	52745-1583	
16	52745-1683	
17	52745-1783	
18	52745-1883	
20	52745-2083	

Note: High-Barrier (moisture protection) packaging

0.50mm (.020") Pitch FFC/FPC Connector

52435

Right Angle, SMT, ZIF Top Contact Style

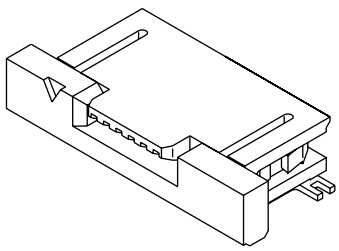

Features and Benefits

- Sizes 21 to 30 circuits
- For 0.30mm (.012") thick FFC/FPC
- Fitting nails provide PCB hold-down and strain relief for SMT tails

Reference Information

Product Specification: PS-52435-025
Packaging: Embossed tape
Designed In: Millimeters

Electrical

Voltage: 50V max.
Current: 0.5A max.
Contact Resistance: 20 milliohms max.
Dielectric Withstanding Voltage: 250V AC/1 min.
Insulation Resistance: 50 Megohms min.

Physical

Housing: Nylon, UL 94V-0
Actuator: PPS, UL 94V-0
Contact: Phosphor Bronze
Plating: Gold
Fitting Nail: Phosphor Bronze, Tin Plating

Circuits	Order No.	Lead-free
21	52435-2171	Yes
22	52435-2271	
24	52435-2471	
25	52435-2571	

Circuits	Order No.	Lead-free
26	52435-2671	Yes
27	52435-2771	
28	52435-2871	
30	52435-3071	

0.50mm (.020") Pitch FFC/FPC Connector

54104

Right Angle, SMT, ZIF Top Contact Style

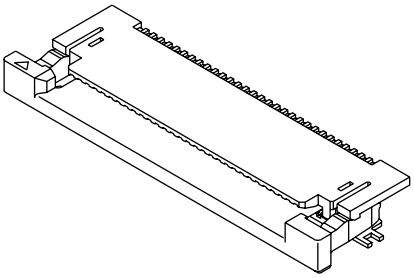

Features and Benefits

- Sizes 30 to 50 circuits
- For 0.30mm (.012") thick FFC/FPC
- Pre-hold cable feature helps facilitate correct FPC insertion
- Durable actuator design
- Fitting nails provide PCB hold-down and strain relief for SMT tails

Reference Information

Production Specification: PS-54104-071
Packaging: Embossed tape
Designed In: Millimeters

Electrical

Voltage: 50V max.
Current: 0.5A max.
Contact Resistance: 20 milliohms max.
Dielectric Withstanding Voltage: 250V AC/1 min.
Insulation Resistance: 50 Megohms min.

Physical

Housing: Nylon, UL 94V-0
Actuator: PPA, UL 94V-0
Contact: Phosphor Bronze
Plating: Gold over Nickel
Fitting Nail: Phosphor Bronze, Tin Plating

Circuits	Order No.	Lead-free
30	54104-3031	Yes
32	54104-3231	
33	54104-3331	
34	54104-3431	
35	54104-3531	
36	54104-3631	

Circuits	Order No.	Lead-free
38	54104-3831	Yes
40	54104-4031	
45	54104-4531	
46	54104-4631	
50	54104-5031	

0.50mm (.020") Pitch FFC/FPC Connector

52746

Right Angle, SMT, ZIF Bottom Contact Style

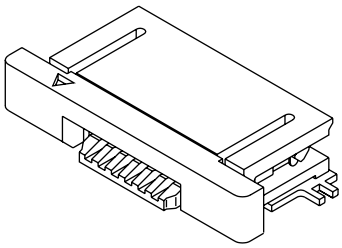

Features and Benefits

- Sizes 4 to 20 circuits
- For 0.30mm (.012") thick FFC/FPC
- Fitting nails provide PCB hold-down and strain relief for SMT tails

Reference Information

Production Specification: PS-54746-015
Packaging: Embossed tape
Designed In: Millimeters

Electrical

Voltage: 50V max.
Current: 0.5A max.
Contact Resistance: 20 milliohms max.
Dielectric Withstanding Voltage: 250V AC/1 min.
Insulation Resistance: 50 Megohms min.

Physical

Housing: Nylon, UL 94V-0
Actuator: PPS, UL 94V-0
Contact: Phosphor Bronze
Plating: Gold over Nickel
Fitting Nails: Phosphor Bronze, Tin over Nickel Plating

Circuits	Order No.	Lead-free
4	52746-0484	Yes
6	52746-0684	
7	52746-0784	
8	52746-0884	
10	52746-1084	
11	52746-1184	

Circuits	Order No.	Lead-free
12	52746-1284	Yes
14	52746-1484	
15	52746-1584	
16	52746-1684	
18	52746-1884	
20	52746-2084	

Note: High-Barrier (moisture protection) packaging

0.50mm (.020") Pitch FFC/FPC Connector

52437

Right Angle, SMT, ZIF Bottom Contact Style

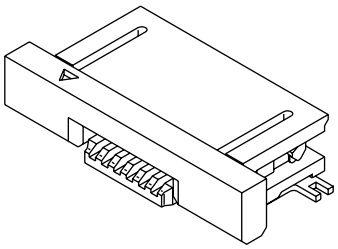

Features and Benefits

- Sizes 21 to 30 circuits
- For 0.30mm (.012") thick FFC/FPC
- Fitting nails provide PCB hold-down and strain relief for SMT tails

Reference Information

Production Specification: PS-52437-027
Packaging: Embossed tape
Designed In: Millimeters

Electrical

Voltage: 50V max.
Current: 0.5A max.
Contact Resistance: 20 milliohms max.
Dielectric Withstanding Voltage: 250V AC/1 min.
Insulation Resistance: 50 Megohms min.

Physical

Housing: Nylon, UL 94V-0
Actuator: PPS, UL 94V-0
Contact: Phosphor Bronze
Plating: Gold
Fitting Nail: Phosphor Bronze, Tin Plating

Circuits	Order No.	Lead-free
21	52437-2171	Yes
22	52437-2271	
23	52437-2371	
24	52437-2471	
25	52437-2571	

Circuits	Order No.	Lead-free
26	52437-2671	Yes
27	52437-2771	
28	52437-2871	
29	52437-2971	
30	52437-3071	

0.50mm (.020") Pitch FFC/FPC Connector

54132

Right Angle, SMT, ZIF Bottom Contact Style

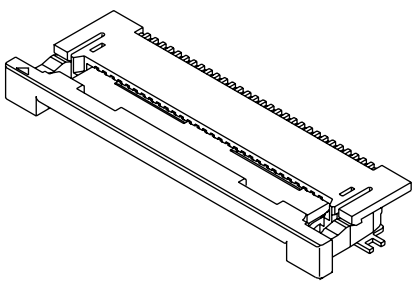

Features and Benefits

- Sizes 30 to 50 circuits
- For 0.30mm (.012") thick FFC/FPC
- Pre-hold cable retention feature helps facilitate correct FPC insertion
- Durable actuator design
- Fitting nails provide PCB hold-down and strain relief for SMT tails

Reference Information

Production Specification: PS-54132-061
Packaging: Embossed tape
Designed In: Millimeters

Electrical

Voltage: 50V max.
Current: 0.5A max.
Contact Resistance: 20 milliohms max.
Dielectric Withstanding Voltage: 250V AC/1 min.
Insulation Resistance: 50 Megohms min.

Physical

Housing: Nylon, UL 94V-0
Actuator: PPS, UL 94V-0
Contact: Phosphor Bronze
Plating: Gold over Nickel
Fitting Nails: Phosphor Bronze, Tin over Nickel plating

Circuits	Order No.	Lead-free
30	54132-3062	Yes
32	54132-3262	
33	54132-3362	
34	54132-3462	
35	54132-3562	
36	54132-3662	

Circuits	Order No.	Lead-free
38	54132-3862	Yes
40	54132-4062	
43	54132-4362	
45	54132-4562	
50	54132-5062	

0.50mm (.020") Pitch Easy-On™ FFC/FPC Connector

51296

Right Angle, SMT, ZIF Bottom Contact Style 1.30mm (.051") Height

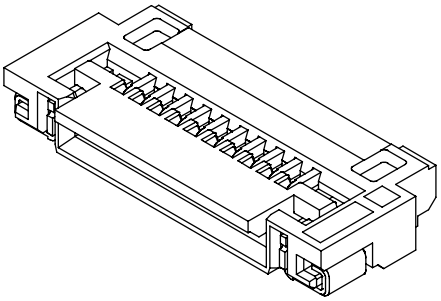

Features and Benefits

- Sizes 8 to 60 circuits
- Actuator rotates to allow for easy cable insertion from top or side
- For 0.30mm (.012") thick FFC/FPC
- Fitting nails provide PCB hold-down and strain relief for SMT tails

Reference Information

Product Specification: PS-51296-003
Packaging: Embossed tape
Designed In: Millimeters

Electrical

Voltage: 50V max.
Current: 0.5A max.
Contact Resistance: 40 milliohms max.
Dielectric Withstanding Voltage: 250V AC/1 min.
Insulation Resistance: 50 Megohms min.

Physical

Housing: Glass-filled LCP, UL 94V-0
Actuator: Glass-filled PA, UL 94V-0
Contact: Phosphor Bronze
Plating: Gold over Nickel
Fitting Nails: Phosphor Bronze, Tin over Nickel

Circuits	Order No.	Lead-free
8	51296-0894	Yes
12	51296-1294	
14	51296-1494	
18	51296-1894	
34	51296-3494	

Circuits	Order No.	Lead-free
40	51296-4094	Yes
45	51296-4594	
50	51296-5094	
54	51296-5494	
60	51296-6094	

0.50mm (.020") Pitch Easy-On™ FFC/FPC Connector

51441

Right Angle, SMT, ZIF Bottom Contact Style 1.10mm (.043") Mated Height

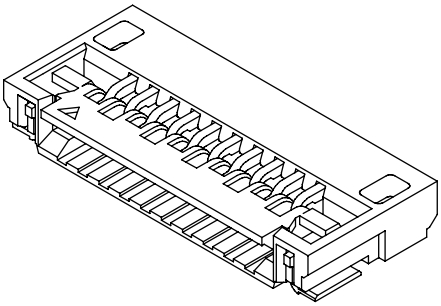

Features and Benefits

- Sizes 8 to 24 circuits
- For 0.30mm (.012") thick FFC/FPC
- Actuator rotates to allow for easy cable insertion from top or side
- Fitting nails provide PCB hold-down and strain relief for SMT tails

Reference Information

Product Specification: PS-51441-006
Packaging: Embossed tape
Designed In: Millimeters

Electrical

Voltage: 50V max.
Current: 0.5A max.
Contact Resistance: 40 milliohms max.
Dielectric Withstanding Voltage: 250V AC/1 min.
Insulation Resistance: 50 Megohms min.

Physical

Housing: Glass-filled LCP, UL 94V-0
Actuator: Glass-filled PPS, UL 94V-0
Contact: Phosphor Bronze
Plating: Gold over Nickel
Fitting Nails: Phosphor Bronze, Tin over Nickel plating

Circuits	Order No.	Lead-free
8	51441-0872	Yes
10	51441-1072	
11	51441-1172	
12	51441-1272	
20	51441-2072	
22	51441-2272	
24	51441-2472	

0.50mm (.020") Pitch Easy-On™ FPC Connector

502790

Right Angle, SMT Double Bottom Contact Style

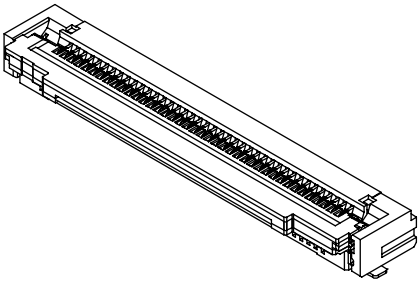

Circuits	Order No.	Lead-free
30	502790-3091	Yes
64	502790-6491	
80	502790-8091	

Features and Benefits

- Double bottom contact enables high contact reliability

Reference Information

Product Specification: PS-502790-001
Packaging: Embossed tape
Designed In: Millimeters

Electrical

Voltage: 50V max.
Current: 0.5A max.
Contact Resistance: 40 milliohms max.
Dielectric Withstanding Voltage: 125V AC/1 min.
Insulation Resistance: 50 Megohms min.

Physical

Housing: Glass-filled LCP, UL 94V-0
Actuator: Glass-filled PPS, UL 94V-0
Contact: Phosphor Bronze
Plating: Gold over Nickel
Fitting Nails: Phosphor Bronze, Tin over Nickel plating

0.50mm (.020") Pitch BackFlip™ Actuator FPC Connector

501461

Right Angle, SMT, ZIF Bottom Contact Style 0.80mm (.031") Mated Height

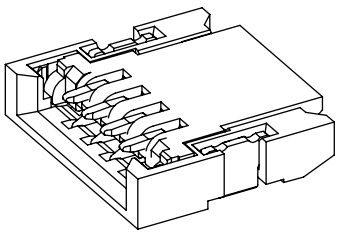

Circuits	Order No.	Lead-free
4	501461-0401	Yes
5	501461-0501	
6	501461-0601	
8	501461-0802	

Features and Benefits

- Sizes 4 to 8 circuits
- Low profile and short width provide space savings
- Two internal FPC locks allow high cable retention force
- Actuator friction locks provide secure mating
- BackFlip actuator

Reference Information

Product Specification: PS-501461-001 (4 to 6 circuits)
PS-501461-002 (8 circuits)
Packaging: Embossed tape
Designed In: Millimeters

Electrical

Voltage: 50V max.
Current: 0.3A max.
Contact Resistance: 40 milliohms max.
Dielectric Withstanding Voltage: 250V AC/1 min.
Insulation Resistance: 50 Megohms min.

Physical

Housing: Glass-filled heat resistant Polymer, UL 94V-0
Actuator: Glass-filled heat resistant Polymer, UL 94V-0
Contact: Copper Alloy
Plating: Gold over Nickel
Fitting Nail: Copper Alloy, Tin over Nickel plating

0.50mm (.020") Pitch Easy-On™ FFC/FPC Connector

501951
Vertical, SMT

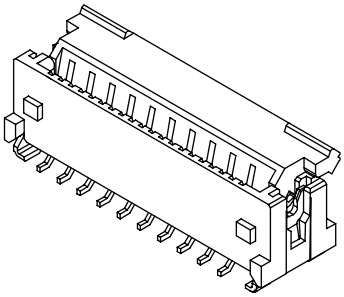

Features and Benefits
- Sizes 20 to 70 circuits
- Robust Easy-On actuator secures cable retention; easy operation
- Wide area on actuator for vacuum pick-up area
- Wide, elevated solder tabs secure PCB retention; space underneath

Reference Information
Product Specification: PS-501951-002
Packaging: Embossed tape
Designed In: Millimeters

Electrical
Voltage: 50V max.
Current: 0.4A max.
Contact Resistance: 40 milliohms max.
Dielectric Withstanding Voltage: 250V AC/1 min.
Insulation Resistance: 50 Megohms min.

Physical
Housing: Glass-filled LCP, UL 94V-0
Actuator: Glass-filled PA, UL 94V-0
Contact: Copper Alloy
Plating: Contact Area—Gold over Nickel
Fitting Nail Area—Tin over Nickel

Circuits	Order No.	Lead-free
20	501951-2010	Yes
22	501951-2210	
24	501951-2410	
30	501951-3010	
32	501951-3210	
40	501951-4010	

Circuits	Order No.	Lead-free
45	501951-4510	Yes
50	501951-5010	
60	501951-6010	
70	501951-7010	

0.50mm (.020") Pitch FFC/FPC Connector

51281
Right Angle, SMT, Non-ZIF Dual Contact Style

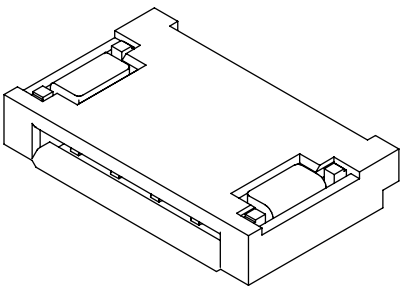

Features and Benefits
- Sizes 5 to 26 circuits
- Cable can be inserted from top or bottom
- Accepts industry standard 0.30mm (.012") thick FFC/FPC
- Low-profile design accommodates height constraints
- Surface mount solder tabs provide retention to the PCB

Reference Information
Product Specification: PS-51281-003
Packaging: Embossed tape
Designed In: Millimeters

Electrical
Voltage: 50V max.
Current: 0.5A max.
Contact Resistance: 20 milliohms max.
Dielectric Withstanding Voltage: 500V AC/1 min.
Insulation Resistance: 50 Megohms min.

Physical
Housing: Glass-filled LCP, UL 94V-0
Contact: Phosphor Bronze
Plating: Contact Area—Gold over Nickel
Solder Tail Area—Tin over Nickel
Fitting Nails: Phosphor Bronze, Tin over Nickel plating

Circuits	Order No.	Lead-free
5	51281-0594	Yes
6	51281-0694	
8	51281-0894	
9	51281-0994	
10	51281-1094	
12	51281-1294	
14	51281-1494	

Circuits	Order No.	Lead-free
16	51281-1694	Yes
18	51281-1894	
20	51281-2094	
22	51281-2294	
24	51281-2494	
26	51281-2694	

0.50mm (.020") Pitch Easy-On™ FFC Connector for LVDS

502231
Vertical, SMT, ZIF

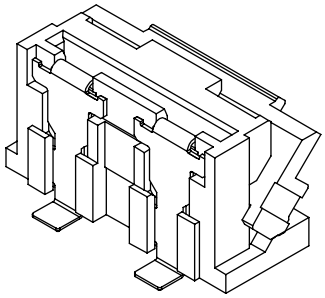

Circuits	Order No.	Lead-free
15	502231-1500	Yes
33	502231-3300	

Features and Benefits
- Sizes 15 and 33 circuits
- Grounding terminals provide noise suppression and good signal integrity
- Wide base on grounding terminals offer grounding support, PCB retention
- Easy-On actuator facilitates cable insertion
- Wide, flat actuator top provides stable pick-and-place area

Reference Information
Product Specification: PS-502231-001
Packaging: Embossed tape
Designed In: Millimeters

Electrical
Voltage: 50V max.
Current: 0.4A max.
Contact Resistance: 40 milliohms max.
Dielectric Withstanding Voltage: 250V AC/1 min.
Insulation Resistance: 50 Megohms min.

Physical
Housing: Glass-filled LCP, UL 94V-0
Actuator: Glass-filled PA, UL 94V-0
Contact: Phosphor Bronze
Plating: Contact Area—Gold over Nickel
Ground Terminal Area—Tin over Nickel

0.50mm (.020") Pitch Easy-On™ FFC Connector for LVDS

502244
Right Angle, SMT, ZIF Bottom Contact Style

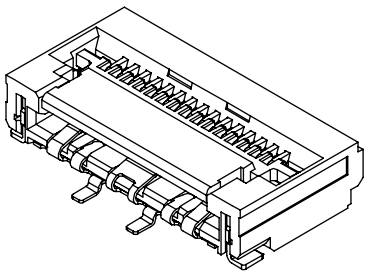

Circuits	Order No.	Lead-free
15	502244-1530	Yes
24	502244-2430	
33	502244-3330	

Features and Benefits
- Sizes 15 to 33 circuits
- Grounding terminals provide noise suppression and good signal integrity
- Wide base on grounding terminals offer grounding support, PCB retention
- Easy-On actuator facilitates cable insertion
- Wide, flat actuator top provides stable pick-and-place area

Reference Information
Product Specification: PS-502244-001
Packaging: Embossed tape
Designed In: Millimeters

Electrical
Voltage: 50V max.
Current: 0.4A max.
Contact Resistance: 40 milliohms max.
Dielectric Withstanding Voltage: 250V AC/1 min.
Insulation Resistance: 50 Megohms min.

Physical
Housing: Glass-filled LCP, UL 94V-0
Actuator: Glass-filled PA, UL 94V-0
Contact: Phosphor Bronze
Plating: Contact Area—Gold over Nickel
Ground Terminal Area—Tin over Nickel
Fitting Nails: Phosphor Bronze, Tin over Nickel Plating

0.50mm (.020") Pitch Easy-On™ FPC Connector Dust Cover type

502611

Right Angle, SMT Bottom Contact Style 3.90mm (.154") Mated Height

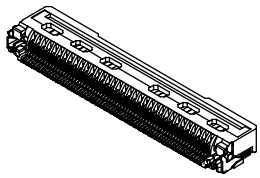

Features and Benefits

- Sizes 20 to 68 circuits
- Dust cover type
- Large actuator on back side prevents dust insertion

Reference Information

Product Specification: PS-502611-002
Packaging: Embossed tape
Designed In: Millimeters

Electrical

Voltage: 100V max.
Current: 0.3A max.
Contact Resistance: 100 milliohms max.
Dielectric Withstanding Voltage: 100V AC/1 min.
Insulation Resistance: 50 Megohms min.

Physical

Housing: Glass-filled heat resistant Polymer, UL 94V-0
Actuator: Glass-filled heat resistant Polymer, UL 94V-0
Contact: Copper Alloy
Plating: Partial Gold over Nickel
Fitting Nails: Copper Alloy, Tin plating

Circuits	Order No.	Lead-free
20	502611-2021	Yes
35	502611-3521	
55	502611-5521	
68	502611-6821	

1.00mm (.039") Pitch FFC/FPC Connector

52610

Vertical, SMT, ZIF

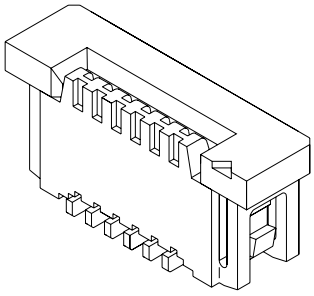

Features and Benefits

- Sizes 6 to 30 circuits
- For 0.30mm thick FFC/FPC

Reference Information

Product Specification: PS-52610-007
UL File No.: E29179
Packaging: Embossed tape
Designed In: Millimeters

Electrical

Voltage: 125V max.
Current: 1.0A max.
Contact Resistance: 20 milliohms max.
Dielectric Withstanding Voltage: 500V AC/1 min.
Insulation Resistance: 100 Megohms min.

Physical

Housing: Nylon, UL 94V-0
Actuator: PPS, UL 94V-0
Contact: Phosphor Bronze
Plating: Contact Area—Gold over Nickel
Solder Tail Area—Tin over Nickel

Circuits	Order No.		Lead-free
	Standard Packaging	High-Barrier Packaging	
6	52610-0672	52610-0677	Yes
8	52610-0872	52610-0877	
9	52610-0972	52610-0977	
10	52610-1072	52610-1077	
12	52610-1272	52610-1277	
14	52610-1472	52610-1477	
15	52610-1572	52610-1577	
16	52610-1672	52610-1677	

Circuits	Order No.		Lead-free
	Standard Packaging	High-Barrier Packaging	
17	52610-1772	52610-1777	Yes
18	52610-1872	52610-1877	
20	52610-2072	52610-2077	
22	52610-2272	52610-2277	
24	52610-2472	52610-2477	
26	52610-2672	52610-2677	
30	52610-3072	52610-3077	

Note: 52610-XX77 is High-Barrier (moisture protection) packaging

1.00mm (.039") Pitch FFC/FPC Connector

52207

Right Angle, SMT, ZIF Top Contact Style

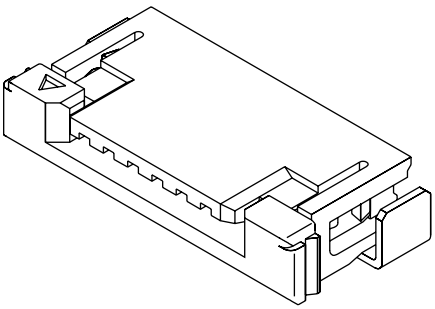

Features and Benefits

- Sizes 3 to 30 circuits
- For 0.30mm thick FFC/FPC
- Fitting nails provide PCB hold-down and strain relief for SMT tails

Reference Information

Product Specification: PS-52207-048
Packaging: Embossed tape
UL File No.: E29179
CSA File No.: LR19980
Designed In: Millimeters

Electrical

Voltage: 125V max.
Current: 1.0A max.
Contact Resistance: 20 milliohms max.
Dielectric Withstanding Voltage: 500V AC/1 min.
Insulation Resistance: 100 Megohms min.

Physical

Housing: Nylon, UL 94V-0
Actuator: PPS, UL 94V-0
Contact: Phosphor Bronze
Plating: Contact Area—Gold over Nickel
Solder Tail Area—Tin over Nickel
Fitting Nail: Copper Alloy, Tin over Nickel plating

Circuits	Order No.		Lead-free
	Standard Packaging	High-Barrier Packaging	
3	52207-0360	52207-0351	Yes
4	52207-0460	52207-0451	
5	52207-0560	52207-0551	
6	52207-0660	52207-0651	
7	52207-0760	52207-0751	
8	52207-0860	52207-0851	
9	52207-0960	52207-0951	
10	52207-1060	52207-1051	

Circuits	Order No.		Lead-free
	Standard Packaging	High-Barrier Packaging	
11	52207-1160	52207-1151	Yes
12	52207-1260	52207-1251	
13	52207-1360	52207-1351	
14	52207-1460	52207-1451	
15	52207-1560	52207-1551	
16	52207-1660	52207-1651	
18	52207-1860	52207-1851	
19	52207-1960	52207-1951	

Circuits	Order No.		Lead-free
	Standard Packaging	High-Barrier Packaging	
20	52207-2060	52207-2051	Yes
21	52207-2160	52207-2151	
22	52207-2260	52207-2251	
24	52207-2460	52207-2451	
26	52207-2660	52207-2651	
27	52207-2760		
28	52207-2860	52207-2851	
30	52207-3060	52207-3051	

Note: 52207-XX51 is High-Barrier (moisture protection) packaging

1.00mm (.039") Pitch FFC/FPC Connector

52271

Right Angle, SMT, ZIF Bottom Contact Style

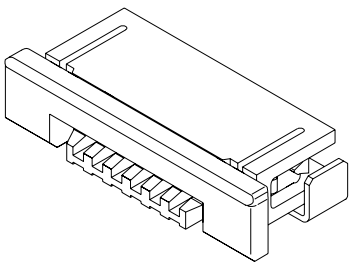

Features and Benefits

- Sizes 5 to 30 circuits
- For 0.30mm thick FFC/FPC
- Fitting nails provide PCB hold-down and strain relief for SMT tails

Reference Information

Product Specification: PS-52271-054
Packaging: Embossed tape
UL File No.: E29179
CSA File No.: LR19980
Designed In: Millimeters

Electrical

Voltage: 50V max.
Current: 0.5A max.
Contact Resistance: 20 milliohms max.
Dielectric Withstanding Voltage: 500V AC/1 min.
Insulation Resistance: 100 Megohms min.

Physical

Housing: Nylon, UL 94V-0
Actuator: PPS, UL 94V-0
Contact: Phosphor Bronze
Plating: Contact Area—Gold over Nickel
Solder Tail Area—Tin over Nickel
Fitting Nail: Copper Alloy, Tin over Nickel plating

Circuits	Order No.		Lead-free
	Standard Packaging	High-Barrier Packaging	
5	52271-0569	52271-0583	Yes
7	52271-0769	52271-0783	
8	52271-0869	52271-0883	
10	52271-1069	52271-1083	
12	52271-1269	52271-1283	
13	52271-1369	52271-1383	
14	52271-1469	52271-1483	
15	52271-1569	52271-1583	
16	52271-1669	52271-1683	

Circuits	Order No.		Lead-free
	Standard Packaging	High-Barrier Packaging	
17	52271-1769	52271-1783	Yes
18	52271-1869	52271-1883	
20	52271-2069	52271-2083	
21	52271-2169	52271-2183	
22	52271-2269	52271-2283	
25	52271-2569	52271-2583	
27	52271-2769	52271-2783	
28	52271-2869		
30	52271-3069	52271-3083	

Note: 52271-XX83 is High-Barrier (moisture protection) packaging

1.00mm (.039") Pitch FFC/FPC Connector

52808

Vertical, SMT, Non-ZIF

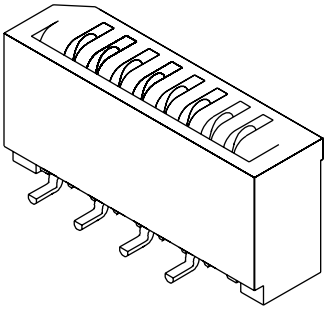

Features and Benefits

- Sizes 4 to 30 circuits

Reference Information

Product Specification: PS-52808-004
Packaging: Embossed tape
Designed In: Millimeters

Electrical

Voltage: 125V max.
Current: 0.5A max.
Contact Resistance: 30 milliohms max.
Dielectric Withstanding Voltage: 500V AC/1 min.
Insulation Resistance: 100 Megohms min.

Physical

Housing: PPS, UL 94V-0
Contact: Phosphor Bronze
Plating: Tin Bismuth over Nickel

Circuits	Order No.	Lead-free
4	52808-0470	Yes
5	52808-0570	
6	52808-0670	
7	52808-0770	
8	52808-0870	
9	52808-0970	
10	52808-1070	
11	52808-1170	
12	52808-1270	

Circuits	Order No.	Lead-free
13	52808-1370	Yes
14	52808-1470	
15	52808-1570	
16	52808-1670	
17	52808-1770	
18	52808-1870	
19	52808-1970	
20	52808-2070	
21	52808-2170	

Circuits	Order No.	Lead-free
22	52808-2270	Yes
23	52808-2370	
24	52808-2470	
25	52808-2570	
26	52808-2670	
27	52808-2770	
28	52808-2870	
29	52808-2970	
30	52808-3070	

1.00mm (.039") Pitch FFC/FPC Connector

52793

Right Angle, SMT, Non-ZIF Top Contact Style

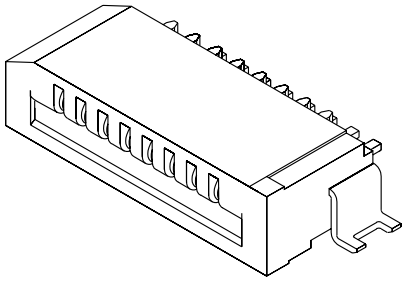

Features and Benefits

- Sizes 4 to 30 circuits
- For 0.30mm thick FFC/FPC
- Fitting nails provide PCB hold-down and strain relief for SMT tails

Reference Information

Product Specification: PS-52793-014
Packaging: Embossed tape
Designed In: Millimeters

Electrical

Voltage: 50V max.
Current: 0.5A max.
Contact Resistance: 30 milliohms max.
Dielectric Withstanding Voltage: 500V AC/1 min.
Insulation Resistance: 100 Megohms min.

Physical

Housing: PPS, UL 94V-0
Contact: Phosphor Bronze
Plating: Tin Bismuth over Nickel
Fitting Nail: Phosphor Bronze, Tin over Nickel plating

Circuits	Order No.	Lead-free
4	52793-0470	Yes
5	52793-0570	
6	52793-0670	
7	52793-0770	
8	52793-0870	
9	52793-0970	
10	52793-1070	
11	52793-1170	
12	52793-1270	

Circuits	Order No.	Lead-free
13	52793-1370	Yes
14	52793-1470	
15	52793-1570	
16	52793-1670	
17	52793-1770	
18	52793-1870	
19	52793-1970	
20	52793-2070	
21	52793-2170	

Circuits	Order No.	Lead-free
22	52793-2270	Yes
23	52793-2370	
24	52793-2470	
25	52793-2570	
26	52793-2670	
27	52793-2770	
28	52793-2870	
29	52793-2970	
30	52793-3070	

1.00mm (.039") Pitch FFC/FPC Connector

52852
Right Angle, SMT, Non-ZIF Bottom Contact Style

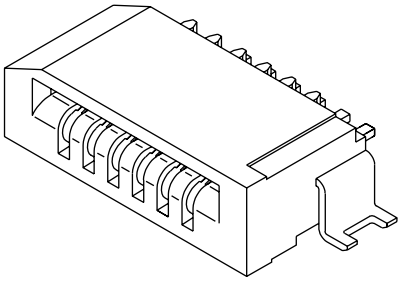

Features and Benefits
- Sizes 4 to 30 circuits
- For 0.30mm thick FFC/FPC
- Fitting nails provide PCB hold-down and strain relief for SMT tails

Reference Information
Product Specification: PS-52852-014
Packaging: Embossed tape
Designed In: Millimeters

Electrical
Voltage: 50V max.
Current: 0.5A max.
Contact Resistance: 20 milliohms max.
Dielectric Withstanding Voltage: 500V AC/1 min.
Insulation Resistance: 50 Megohms min.

Physical
Housing: PPS, UL 94V-0
Contact: Phosphor Bronze
Plating: Tin Bismuth over Nickel
Fitting Nail: Phosphor Bronze, Tin over Nickel plating

Circuits	Order No.	Lead-free
4	52852-0470	Yes
5	52852-0570	
6	52852-0670	
7	52852-0770	
8	52852-0870	
9	52852-0970	
10	52852-1070	
11	52852-1170	
12	52852-1270	

Circuits	Order No.	Lead-free
13	52852-1370	Yes
14	52852-1470	
15	52852-1570	
16	52852-1670	
18	52852-1870	
19	52852-1970	
20	52852-2070	
22	52852-2270	
23	52852-2370	

Circuits	Order No.	Lead-free
24	52852-2470	Yes
25	52852-2570	
26	52852-2670	
27	52852-2770	
28	52852-2870	
29	52852-2970	
30	52852-3070	

1.25mm (.049") Pitch FFC/FPC Connector

5597-NCPB7F
Vertical, ZIF

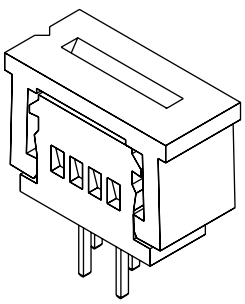

Features and Benefits
- Sizes 3 to 30 circuits
- Staggered solder tails, 3.50mm (.138") long
- 5597 accommodates FFC/FPC 0.30mm (.012") thick

Reference Information
Product Specification: PS-5597-004
Packaging: Tray
UL File No.: E29179
Designed In: Millimeters

Electrical
Voltage: 2V max.
Current: 1.0A max.
Contact Resistance: 20 milliohms max.
Dielectric Withstanding Voltage: 500V AC/1 min.
Insulation Resistance: 500 Megohms min.

Physical
Housing: PBTP, UL 94V-0
Actuator: PBTP, UL 94V-0
Contact: Phosphor Bronze
Plating: Tin Bismuth over Nickel

Circuits	Order No.	Lead-free
3	39-53-2035	Yes
4	39-53-2045	
5	39-53-2055	
6	39-53-2065	
7	39-53-2075	
8	39-53-2085	
9	39-53-2095	
10	39-53-2105	
11	39-53-2115	
12	39-53-2125	

Circuits	Order No.	Lead-free
13	39-53-2135	Yes
14	39-53-2145	
15	39-53-2155	
16	39-53-2165	
17	39-53-2175	
18	39-53-2185	
19	39-53-2195	
20	39-53-2205	
21	39-53-2215	
22	39-53-2225	

Circuits	Order No.	Lead-free
23	39-53-2235	Yes
24	39-53-2245	
25	39-53-2255	
26	39-53-2265	
27	39-53-2275	
28	39-53-2285	
29	39-53-2295	
30	39-53-2305	

1.25mm (.049") Pitch FFC/FPC Connector

52045
Vertical, Non-ZIF

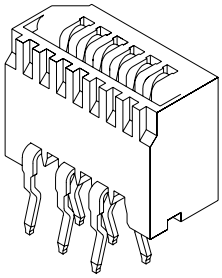

Features and Benefits
- Sizes 3 to 40 circuits
- For 0.30mm thick FFC/FPC
- All solder tails kinked for added PCB retention

Reference Information
Product Specification: PS-52045-001
Packaging: Tray
UL File No.: E29179
Designed In: Millimeters

Electrical
Voltage: 200V max.
Current: 1.0A max.
Contact Resistance: 30 milliohms max.
Dielectric Withstanding Voltage: 500V AC/1 min.
Insulation Resistance: 500 Megohms min.

Physical
Housing: PBTP, UL 94V-0
Contact: Phosphor Bronze
Plating: Tin

Circuits	Order No.	Lead-free
3	52045-0345	Yes
4	52045-0445	
5	52045-0545	
6	52045-0645	
7	52045-0745	
8	52045-0845	
9	52045-0945	
10	52045-1045	
11	52045-1145	
12	52045-1245	
13	52045-1345	
14	52045-1445	
15	52045-1545	

Circuits	Order No.	Lead-free
16	52045-1645	Yes
17	52045-1745	
18	52045-1845	
19	52045-1945	
20	52045-2045	
21	52045-2145	
22	52045-2245	
23	52045-2345	
24	52045-2445	
25	52045-2545	
26	52045-2645	
27	52045-2745	
28	52045-2845	

Circuits	Order No.	Lead-free
29	52045-2945	Yes
30	52045-3045	
31	52045-3145	
32	52045-3245	
33	52045-3345	
34	52045-3445	
35	52045-3545	
36	52045-3645	
37	52045-3745	
38	52045-3845	
39	52045-3945	
40	52045-4045	

1.25mm (.049") Pitch FFC/FPC Connector

5597-NAPB7F
Right Angle, ZIF

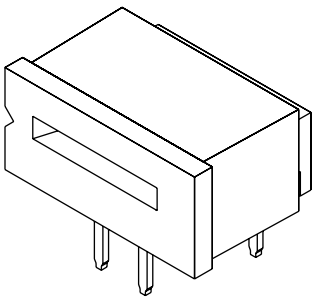

Features and Benefits
- Sizes 3 to 30 circuits
- Staggered solder tails, 3.50mm (.138") long
- 5597 accommodates FFC/FPC 0.30mm (.012") thick

Reference Information
Product Specification: PS-5597-004
Packaging: Tray
UL File No.: E29179
Designed In: Millimeters

Electrical
Voltage: 2V max.
Current: 1.0A max.
Contact Resistance: 20 milliohms max.
Dielectric Withstanding Voltage: 500V AC/1 min.
Insulation Resistance: 500 Megohms min.

Physical
Housing: PBTP, UL 94V-0
Actuator: PBTP, UL 94V-0
Contact: Phosphor Bronze
Plating: Tin Bismuth over Nickel

Circuits	Order No.	Lead-free
3	39-53-2034	Yes
4	39-53-2044	
5	39-53-2054	
6	39-53-2064	
7	39-53-2074	
8	39-53-2084	
9	39-53-2094	
10	39-53-2104	
11	39-53-2114	
12	39-53-2124	

Circuits	Order No.	Lead-free
13	39-53-2134	Yes
14	39-53-2144	
15	39-53-2154	
16	39-53-2164	
17	39-53-2174	
18	39-53-2184	
19	39-53-2194	
20	39-53-2204	
21	39-53-2214	
22	39-53-2224	

Circuits	Order No.	Lead-free
23	39-53-2234	Yes
24	39-53-2244	
25	39-53-2254	
26	39-53-2264	
27	39-53-2274	
28	39-53-2284	
29	39-53-2294	
30	39-53-2304	

1.25mm (.049") Pitch FFC/FPC Connector

52044

Right Angle, Non-ZIF Top Contact Style

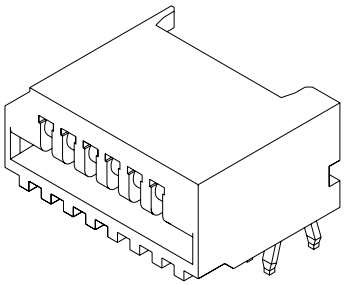

Features and Benefits

- Sizes 3 to 40 circuits
- For 0.30mm thick FFC/FPC
- All solder tails kinked for added PCB retention

Reference Information

Product Specification: PS-52044-002
Packaging: Tray
UL File No.: E29179
Designed In: Millimeters

Electrical

Voltage: 200V max.
Current: 1.0A max.
Contact Resistance: 30 milliohms max.
Dielectric Withstanding Voltage: 500V AC/1 min.
Insulation Resistance: 500 Megohms min.

Physical

Housing: PBTP, UL 94V-0
Contact: Phosphor Bronze
Plating: Tin

www.molex.com/product/ffc/

Circuits	Order No.	Lead-free
3	52044-0345	Yes
4	52044-0445	
5	52044-0545	
6	52044-0645	
7	52044-0745	
8	52044-0845	
9	52044-0945	
10	52044-1045	
11	52044-1145	
12	52044-1245	
13	52044-1345	
14	52044-1445	
15	52044-1545	

Circuits	Order No.	Lead-free
16	52044-1645	Yes
17	52044-1745	
18	52044-1845	
19	52044-1945	
20	52044-2045	
21	52044-2145	
22	52044-2245	
23	52044-2345	
24	52044-2445	
25	52044-2545	
26	52044-2645	
27	52044-2745	
28	52044-2845	

Circuits	Order No.	Lead-free
29	52044-2945	Yes
30	52044-3045	
31	52044-3145	
32	52044-3245	
33	52044-3345	
34	52044-3445	
35	52044-3545	
36	52044-3645	
37	52044-3745	
38	52044-3845	
39	52044-3945	
40	52044-4045	

2.54mm (.100") Pitch SL™ FFC/FPC Connector

70430

Single Row, Female Version A

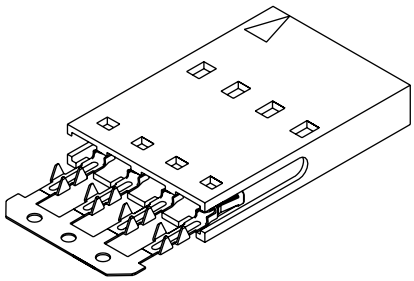

Features and Benefits

- Sizes 2 to 25 circuits
- Stackable end-to-end and side-by-side
- Piercing crimp provides 3 high-pressure interfaces with the conductor
- Terminals preloaded into housing

Reference Information

Product Specification: PS-70430
Packaging: Tube
UL File No.: E29179
CSA File No.: LR19980
Mates With: 2.54mm (.100") pitch, single or dual row headers (C-Grid®, SL, KK®)
Designed In: Inches

Electrical

Voltage: 250V
Current: 2.0A (for Copper conductors)
Contact Resistance: 10 milliohms max.
Dielectric Withstanding Voltage: 1500V
Insulation Resistance: 1000 Megohms min.

Mechanical

Contact Retention to Housing: 13.34N (3 lb) min.
Mating Force: 2.22N (.50 lb) max.
Unmating Force: 0.28N (.06 lb) min.
Wire Pull-Out Force: 26.69N (6 lb)
Durability: Tin—25 cycles; Gold—50 cycles

Physical

Housing: Black polyester, UL 94V-0
Contact: Copper Alloy
Plating: See Table

Circuits	Order No.			Lead-free
	150µ" Tin	15µ" Gold	30µ" Gold	
2	15-38-8028	15-47-4020	15-47-4024	Yes
3	15-38-8038	15-47-4030	15-47-4034	
4	15-38-8048	15-47-4040	15-47-4044	
5	15-38-8058	15-47-4050	15-47-4054	
6	15-38-8068	15-47-4060	15-47-4064	
7	15-38-8078	15-47-4070	15-47-4074	
8	15-38-8088	15-47-4080	15-47-4084	
9	15-38-8098	15-47-4090	15-47-4094	
10	15-38-8108	15-47-4100	15-47-4104	
11	15-38-8118	15-47-4110	15-47-4114	
12	15-38-8128	15-47-4120	15-47-4124	
13	15-38-8138	15-47-4130	15-47-4134	

Circuits	Order No.			Lead-free
	150µ" Tin	15µ" Gold	30µ" Gold	
14	15-38-8148	15-47-4140	15-47-4144	Yes
15	15-38-8158	15-47-4150	15-47-4154	
16	15-38-8168	15-47-4160	15-47-4164	
17	15-38-8178	15-47-4170	15-47-4174	
18	15-38-8188	15-47-4180	15-47-4184	
19	15-38-8198	15-47-4190	15-47-4194	
20	15-38-8208	15-47-4200	15-47-4204	
21	15-38-8218	15-47-4210	15-47-4214	
22	15-38-8228	15-47-4220	15-47-4224	
23	15-38-8238	15-47-4230	15-47-4234	
24	15-38-8248	15-47-4240	15-47-4244	
25	15-38-8258	15-47-4250	15-47-4254	

2.54mm (.100") Pitch SL™ FFC/FPC Connector

70430

Single Row, Female Version C

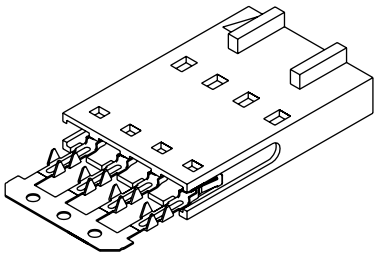

Features and Benefits

- Sizes 2 to 25 circuits
- Front polarizing ribs prevent pin damage during disconnect, housing cannot be twisted off pins
- Piercing crimp provides 3 high-pressure interfaces with the conductor
- Terminals preloaded into housing

Reference Information

Product Specification: PS-70430
Packaging: Tube
UL File No.: E29179
CSA File No.: LR19980
Mates With: 2.54mm (.100") SL headers
Designed In: Inches

Electrical

Voltage: 250V
Current: 2.0A (for Copper conductors)
Contact Resistance: 10 milliohms max.
Dielectric Withstanding Voltage: 1500V
Insulation Resistance: 1000 Megohms min.

Mechanical

Contact Retention to Housing: 13.34N (3 lb) min.
Mating Force: 2.22N (.50 lb) max.
Unmating Force: 0.28N (.06 lb) min.
Wire Pull-Out Force: 26.69N (6 lb)
Durability: Tin—25 cycles; Gold—50 cycles

Physical

Housing: Black polyester, UL 94V-0
Contact: Copper Alloy
Plating: See Table

Circuits	Order No.			Lead-free
	150µ" Tin	15µ" Gold	30µ" Gold	
2	15-38-8027	15-47-4021	15-47-4025	Yes
3	15-38-8037	15-47-4031	15-47-4035	
4	15-38-8047	15-47-4041	15-47-4045	
5	15-38-8057	15-47-4051	15-47-4055	
6	15-38-8067	15-47-4061	15-47-4065	
7	15-38-8077	15-47-4071	15-47-4075	
8	15-38-8087	15-47-4081	15-47-4085	
9	15-38-8097	15-47-4091	15-47-4095	
10	15-38-8107	15-47-4101	15-47-4105	
11	15-38-8117	15-47-4111	15-47-4115	
12	15-38-8127	15-47-4121	15-47-4125	
13	15-38-8137	15-47-4131	15-47-4135	

Circuits	Order No.			Lead-free
	150µ" Tin	15µ" Gold	30µ" Gold	
14	15-38-8147	15-47-4141	15-47-4145	Yes
15	15-38-8157	15-47-4151	15-47-4155	
16	15-38-8167	15-47-4161	15-47-4165	
17	15-38-8177	15-47-4171	15-47-4175	
18	15-38-8187	15-47-4181	15-47-4185	
19	15-38-8197	15-47-4191	15-47-4195	
20	15-38-8207	15-47-4201	15-47-4205	
21	15-38-8217	15-47-4211	15-47-4215	
22	15-38-8227	15-47-4221	15-47-4225	
23	15-38-8237	15-47-4231	15-47-4235	
24	15-38-8247	15-47-4241	15-47-4245	
25	15-38-8257	15-47-4251	15-47-4255	

2.54mm (.100") Pitch SL™ FFC/FPC Connector

70430

Single Row, Female Version D

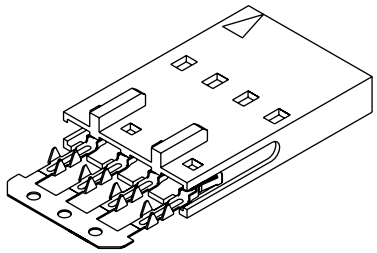

Features and Benefits

- Sizes 2 to 25 circuits
- Designed for use within interim clips and panel mount connectors to form a larger single mating connector
- Stackable end-to-end and back-to-back
- Back polarizing ribs prevent the assembly from drifting within the interim clip when another module is removed
- Piercing crimp provides 3 high-pressure interfaces with the conductor
- Terminals preloaded into housing

Reference Information

Product Specification: PS-70430
Packaging: Tube
UL File No.: E29179
CSA File No.: LR19980
Accessories: Interim clips 70004 and 70013 to form female connector assembly
Mates With: 70021 male crimp terminals, 70400 and 70430 connector assemblies and 0.64mm (.025") square pins
Designed In: Inches

Electrical

Voltage: 250V
Current: 2.0A (for Copper conductors)
Contact Resistance: 10 milliohms max.
Dielectric Withstanding Voltage: 1500V
Insulation Resistance: 1000 Megohms min.

Mechanical

Contact Retention to Housing: 13.34N (3 lb) min.
Mating Force: 2.22N (.50 lb) max.
Unmating Force: 0.28N (.06 lb) min.
Wire Pull-Out Force: 26.69N (6 lb)
Durability: Tin—25 cycles; Gold—50 cycles

Physical

Housing: Black polyester, UL 94V-0
Contact: Copper Alloy
Plating: See Table

Circuits	Order No.			Lead-free
	150µ" Tin	15µ" Gold	30µ" Gold	
2	15-38-8029	15-47-4022	15-47-4026	Yes
3	15-38-8039	15-47-4032	15-47-4036	
4	15-38-8049	15-47-4042	15-47-4046	
5	15-38-8059	15-47-4052	15-47-4056	
6	15-38-8069	15-47-4062	15-47-4066	
7	15-38-8079	15-47-4072	15-47-4076	
8	15-38-8089	15-47-4082	15-47-4086	
9	15-38-8099	15-47-4092	15-47-4096	
10	15-38-8109	15-47-4102	15-47-4106	
11	15-38-8119	15-47-4112	15-47-4116	
12	15-38-8129	15-47-4122	15-47-4126	
13	15-38-8139	15-47-4132	15-47-4136	

Circuits	Order No.			Lead-free
	150µ" Tin	15µ" Gold	30µ" Gold	
14	15-38-8149	15-47-4142	15-47-4146	Yes
15	15-38-8157	15-47-4152	15-47-4156	
16	15-38-8169	15-47-4162	15-47-4166	
17	15-38-8179	15-47-4172	15-47-4176	
18	15-38-8189	15-47-4182	15-47-4186	
19	15-38-8199	15-47-4192	15-47-4196	
20	15-38-8209	15-47-4202	15-47-4206	
21	15-38-8219	15-47-4212	15-47-4216	
22	15-38-8229	15-47-4222	15-47-4226	
23	15-38-8239	15-47-4232	15-47-4236	
24	15-38-8249	15-47-4242	15-47-4246	
25	15-38-8259	15-47-4252	15-47-4256	

2.54mm (.100") Pitch SL™ FFC/FPC Connector

70430
Single Row, Female Version G

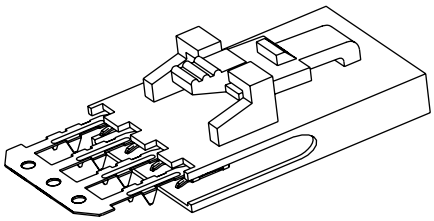

Features and Benefits
- Sizes 2 to 25 circuits
- Positive latch locks connector to header or panel mount
- Piercing crimp provides 3 high-pressure interfaces with the conductor
- Terminals preloaded into housing

Reference Information
Product Specification: PS-70430
Packaging: Tube
UL File No.: E29179
CSA File No.: LR19980
Mates With: 70018, 70107A/B, 70541, 70543, 70545, 70551, 70553, 70555, 70634 and 74099
Designed In: Inches

Electrical
Voltage: 250V
Current: 2.0A (for Copper conductors)
Contact Resistance: 10 milliohms max.
Dielectric Withstanding Voltage: 1500V
Insulation Resistance: 1000 Megohms min.

Mechanical
Contact Retention to Housing: 13.34N (3 lb) min.
Mating Force: 2.22N (.50 lb) max.
Unmating Force: 0.28N (.06 lb) min.
Wire Pull-Out Force: 26.69N (6 lb)
Durability: Tin—25 cycles; Gold—50 cycles

Physical
Housing: Black polyester, UL 94V-0
Contact: Copper Alloy
Plating: See Table

Circuits	Order No.			Lead-free
	150µ" Tin	15µ" Gold	30µ" Gold	
2	15-38-8020	15-47-4023	15-47-4027	Yes
3	15-38-8030	15-47-4033	15-47-4037	
4	15-38-8040	15-47-4043	15-47-4047	
5	15-38-8050	15-47-4053	15-47-4057	
6	15-38-8060	15-47-4063	15-47-4067	
7	15-38-8070	15-47-4073	15-47-4077	
8	15-38-8080	15-47-4083	15-47-4087	
9	15-38-8090	15-47-4093	15-47-4097	
10	15-38-8100	15-47-4103	15-47-4107	
11	15-38-8110	15-47-4113	15-47-4117	
12	15-38-8120	15-47-4123	15-47-4127	
13	15-38-8130	15-47-4133	15-47-4137	

Circuits	Order No.			Lead-free
	150µ" Tin	15µ" Gold	30µ" Gold	
14	15-38-8140	15-47-4143	15-47-4147	Yes
15	15-38-8150	15-47-4153	15-47-4157	
16	15-38-8160	15-47-4163	15-47-4167	
17	15-38-8170	15-47-4173	15-47-4177	
18	15-38-8180	15-47-4183	15-47-4187	
19	15-38-8190	15-47-4193	15-47-4197	
20	15-38-8200	15-47-4203	15-47-4207	
21	15-38-8210	15-47-4213	15-47-4217	
22	15-38-8220	15-47-4223	15-47-4227	
23	15-38-8230	15-47-4233	15-47-4237	
24	15-38-8240	15-47-4243	15-47-4247	
25	15-38-8250	15-47-4253	15-47-4257	

2.54mm (.100") Pitch SL™ FFC/FPC Connector

70431
Single Row, Male Version D

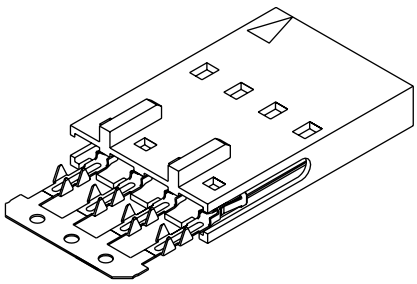

Features and Benefits
- Sizes 2 to 25 circuits
- Stackable end-to-end and back-to-back
- Back ribs prevent movement when used within panel mount housings
- Piercing crimp provides 3 high-pressure interfaces with the conductor
- Terminals preloaded into housing

Reference Information
Product Specification: PS-70431
Packaging: Tube
UL File No.: E29179
CSA File No.: LR19980
Accessories: Panel mount connectors 70018, 70022 and 70104 to form a male pin assembly
Mates With: 70058 and 71851 female crimp terminals, 70400 and 70430 connector assemblies and 0.64mm (.025") square pins
Designed In: Inches

Electrical
Voltage: 250V
Current: 2.0A (for Copper conductors)
Contact Resistance: 10 milliohms max.
Dielectric Withstanding Voltage: 1500V
Insulation Resistance: 1000 Megohms min.

Mechanical
Wire Pull-Out Force: 26.69N (6 lb)
Mating Force: 2.22N (.50 lb) max.
Unmating Force: 0.28N (.06 lb) min.
Durability: Tin—25 cycles; Gold—50 cycles

Physical
Housing: Black polyester, UL 94V-0
Contact: Copper Alloy
Plating: See Table

Circuits	Order No.		
	15µ" Gold	30µ" Gold	150µ" Tin
2	15-47-5020	15-47-5024	15-38-9022
3	15-47-5030	15-47-5034	15-38-9032
4	15-47-5040	15-47-5044	15-38-9042
5	15-47-5050	15-47-5054	15-38-9052
6	15-47-5060	15-47-5064	15-38-9062
7	15-47-5070	15-47-5074	15-38-9072
8	15-47-5080	15-47-5084	15-38-9082
9	15-47-5090	15-47-5094	15-38-9092
10	15-47-5100	15-47-5104	15-38-9102
11	15-47-5110	15-47-5114	15-38-9112
12	15-47-5120	15-47-5124	15-38-9122
13	15-47-5130	15-47-5134	15-38-9132

Circuits	Order No.		
	15µ" Gold	30µ" Gold	150µ" Tin
14	15-47-5140	15-47-5144	15-38-9142
15	15-47-5150	15-47-5154	15-38-9152
16	15-47-5160	15-47-5164	15-38-9162
17	15-47-5170	15-47-5174	15-38-9172
18	15-47-5180	15-47-5184	15-38-9182
19	15-47-5190	15-47-5194	15-38-9192
20	15-47-5200	15-47-5204	15-38-9202
21	15-47-5210	15-47-5214	15-38-9212
22	15-47-5220	15-47-5224	15-38-9222
23	15-47-5230	15-47-5234	15-38-9232
24	15-47-5240	15-47-5244	15-38-9242
25	15-47-5250	15-47-5254	15-38-9252

0.50mm (.020") Pitch Premo-Flex™ Flat Flex Cable Jumpers

21020
Standard

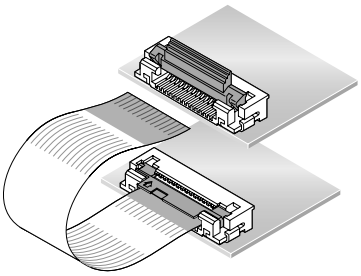

Molex introduces a complete line of 0.50mm (.020") pitch Flat Flex Cable jumpers. These jumpers are used to connect 2 PC boards and terminate to either ZIF or Non-ZIF FFC Connectors.

Molex 0.50mm (.020") Flat Flex Cable jumpers are available in a wide variety of lengths and circuit sizes. These standard lengths are easy to order and feature shorter lead times.

Reference Information

UL Style No.: 2896
Mates With: Any 0.50mm (.020") pitch Molex FFC/FPC connector
Designed In: Millimeters

Electrical

Voltage: 30V
Current: 0.5A

Physical

Strip Length: 4.0mm (.157")
Reinforcement Length: 6.00mm (.236")
Width: (N + 1) 0.50mm
Span: (N - 1) 0.50mm
Margin: 0.35mm (.014")
Conductor Width: 0.30mm (.012")
Conductor Thickness: 0.10mm (.004")
End Thickness: 0.30 ± 0.05mm (.012 ± .002")

Type A FFC Jumpers—Contacts on same side (Preferred version in North America)

Circuits	Order No.											Lead-free
	Overall Length											
	30.00mm (1.181")	51.00mm (2.00")	76.00mm (3.00")	102.00mm (4.00")	127.00mm (5.00")	152.00mm (6.00")	178.00mm (7.00")	203.00mm (8.00")	229.00mm (9.00")	254.00mm (10.00")	305.00mm (12.00")	
6	21020-0051	21020-0053	21020-0055	21020-0057	21020-0059	21020-0061	21020-0063	21020-0065	21020-0067	21020-0069	21020-0071	Yes
7	21020-0745	21020-0747	21020-0749	21020-0751	21020-0753	21020-0755	21020-0757	21020-0759	21020-0761	21020-0763	21020-0765	
8	21020-0073	21020-0075	21020-0077	21020-0079	21020-0081	21020-0083	21020-0085	21020-0087	21020-0089	21020-0091	21020-0093	
9	21020-0767	21020-0769	21020-0771	21020-0773	21020-0775	21020-0777	21020-0779	21020-0781	21020-0783	21020-0785	21020-0787	
10	21020-0095	21020-0097	21020-0099	21020-0101	21020-0103	21020-0105	21020-0107	21020-0109	21020-0111	21020-0113	21020-0115	
11	21020-0789	21020-0791	21020-0793	21020-0795	21020-0797	21020-0799	21020-0801	21020-0803	21020-0805	21020-0807	21020-0809	
12	21020-0117	21020-0119	21020-0121	21020-0123	21020-0125	21020-0127	21020-0129	21020-0131	21020-0133	21020-0135	21020-0137	
13	21020-0811	21020-0813	21020-0815	21020-0817	21020-0819	21020-0821	21020-0823	21020-0825	21020-0827	21020-0829	21020-0831	
14	21020-0139	21020-0141	21020-0143	21020-0145	21020-0147	21020-0149	21020-0151	21020-0153	21020-0155	21020-0157	21020-0159	
15	21020-0833	21020-0835	21020-0837	21020-0839	21020-0841	21020-0843	21020-0845	21020-0847	21020-0849	21020-0851	21020-0853	
16	21020-0161	21020-0163	21020-0165	21020-0167	21020-0169	21020-0171	21020-0173	21020-0175	21020-0177	21020-0179	21020-0181	
17	21020-0855	21020-0857	21020-0859	21020-0861	21020-0863	21020-0865	21020-0867	21020-0869	21020-0871	21020-0873	21020-0875	
18	21020-0183	21020-0185	21020-0187	21020-0189	21020-0191	21020-0193	21020-0195	21020-0197	21020-0199	21020-0201	21020-0203	
19	21020-0877	21020-0879	21020-0881	21020-0883	21020-0885	21020-0887	21020-0889	21020-0891	21020-0893	21020-0895	21020-0897	
20	21020-0205	21020-0207	21020-0209	21020-0211	21020-0213	21020-0215	21020-0217	21020-0219	21020-0221	21020-0223	21020-0225	
21	21020-0899	21020-0901	21020-0903	21020-0905	21020-0907	21020-0909	21020-0911	21020-0913	21020-0915	21020-0917	21020-0919	
22	21020-0227	21020-0229	21020-0231	21020-0233	21020-0235	21020-0237	21020-0239	21020-0241	21020-0243	21020-0245	21020-0247	
23	21020-0921	21020-0923	21020-0925	21020-0927	21020-0929	21020-0931	21020-0933	21020-0935	21020-0937	21020-0939	21020-0941	
24	21020-0249	21020-0251	21020-0253	21020-0255	21020-0257	21020-0259	21020-0261	21020-0263	21020-0265	21020-0267	21020-0269	
25	21020-0943	21020-0945	21020-0947	21020-0949	21020-0951	21020-0953	21020-0955	21020-0957	21020-0959	21020-0961	21020-0963	
26	21020-0271	21020-0273	21020-0275	21020-0277	21020-0279	21020-0281	21020-0283	21020-0285	21020-0287	21020-0289	21020-0291	
27	21020-0965	21020-0967	21020-0969	21020-0971	21020-0973	21020-0975	21020-0977	21020-0979	21020-0981	21020-0983	21020-0985	
28	21020-0293	21020-0295	21020-0297	21020-0299	21020-0301	21020-0303	21020-0305	21020-0307	21020-0309	21020-0311	21020-0313	
29	21020-0987	21020-0989	21020-0991	21020-0993	21020-0995	21020-0997	21020-0999	21020-1001	21020-1003	21020-1005	21020-1007	
30	21020-0315	21020-0317	21020-0319	21020-0321	21020-0323	21020-0325	21020-0327	21020-0329	21020-0331	21020-0333	21020-0335	
31	21020-1009	21020-1011	21020-1013	21020-1015	21020-1017	21020-1019	21020-1021	21020-1023	21020-1025	21020-1027	21020-1029	
32	21020-0337	21020-0339	21020-0341	21020-0343	21020-0345	21020-0347	21020-0349	21020-0351	21020-0353	21020-0355	21020-0357	
33	21020-1031	21020-1033	21020-1035	21020-1037	21020-1039	21020-1041	21020-1043	21020-1045	21020-1047	21020-1049	21020-1051	
34	21020-0359	21020-0361	21020-0363	21020-0365	21020-0367	21020-0369	21020-0371	21020-0373	21020-0375	21020-0377	21020-0379	
35	21020-1053	21020-1055	21020-1057	21020-1059	21020-1061	21020-1063	21020-1065	21020-1067	21020-1069	21020-1071	21020-1073	
36	21020-0381	21020-0383	21020-0385	21020-0387	21020-0389	21020-0391	21020-0393	21020-0395	21020-0397	21020-0399	21020-0401	
37	21020-1075	21020-1077	21020-1079	21020-1081	21020-1083	21020-1085	21020-1087	21020-1089	21020-1091	21020-1093	21020-1095	
38	21020-0403	21020-0405	21020-0407	21020-0409	21020-0411	21020-0413	21020-0415	21020-0417	21020-0419	21020-0421	21020-0423	
39	21020-1097	21020-1099	21020-1101	21020-1103	21020-1105	21020-1107	21020-1109	21020-1111	21020-1113	21020-1115	21020-1117	
40	21020-0425	21020-0427	21020-0429	21020-0431	21020-0433	21020-0435	21020-0437	21020-0439	21020-0441	21020-0443	21020-0445	

Custom jumpers available

0.50mm (.020") Pitch Premo-Flex™ Flat Flex Cable Jumpers

21020
Standard

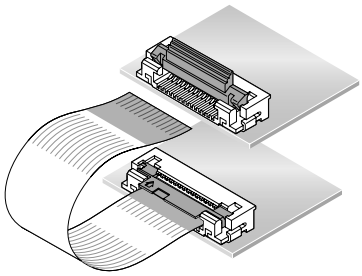

Molex introduces a complete line of 0.50mm (.020") pitch Flat Flex Cable jumpers. These jumpers are used to connect 2 PC boards and terminate to either ZIF or Non-ZIF FFC Connectors.

Molex 0.50mm (.020") Flat Flex Cable jumpers are available in a wide variety of lengths and circuit sizes. These standard lengths are easy to order and feature shorter lead times.

Reference Information

UL Style No.: 2896
Mates With: Any 0.50mm (.020") pitch Molex FFC/FPC connector
Designed In: Millimeters

Electrical

Voltage: 30V
Current: 0.5A

Physical

Strip Length: 4.0mm (.157")
Reinforcement Length: 6.00mm (.236")
Width: (N + 1) 0.50mm
Span: (N - 1) 0.50mm
Margin: 0.35mm (.014")
Conductor Width: 0.30mm (.012")
Conductor Thickness: 0.10mm (.004")
End Thickness: 0.30 ± 0.05mm (.012 ± .002")

Type D FFC Jumpers—Contacts on opposite sides (Preferred version in North America)

Circuits	Order No.											Lead-free
	Overall Length											
	30.00mm (1.181")	51.00mm (2.00")	76.00mm (3.00")	102.00mm (4.00")	127.00mm (5.00")	152.00mm (6.00")	178.00mm (7.00")	203.00mm (8.00")	229.00mm (9.00")	254.00mm (10.00")	305.00mm (12.00")	
6	21020-0052	21020-0054	21020-0056	21020-0058	21020-0060	21020-0062	21020-0064	21020-0066	21020-0068	21020-0070	21020-0072	Yes
7	21020-0744	21020-0746	21020-0748	21020-0750	21020-0752	21020-0754	21020-0756	21020-0758	21020-0760	21020-0762	21020-0764	
8	21020-0074	21020-0076	21020-0078	21020-0080	21020-0082	21020-0084	21020-0086	21020-0088	21020-0090	21020-0092	21020-0094	
9	21020-0766	21020-0768	21020-0770	21020-0772	21020-0774	21020-0776	21020-0778	21020-0780	21020-0782	21020-0784	21020-0786	
10	21020-0096	21020-0098	21020-0100	21020-0102	21020-0104	21020-0106	21020-0108	21020-0110	21020-0112	21020-0114	21020-0116	
11	21020-0788	21020-0790	21020-0792	21020-0794	21020-0796	21020-0798	21020-0800	21020-0802	21020-0804	21020-0806	21020-0808	
12	21020-0118	21020-0120	21020-0122	21020-0124	21020-0126	21020-0128	21020-0130	21020-0132	21020-0134	21020-0136	21020-0138	
13	21020-0810	21020-0812	21020-0814	21020-0816	21020-0818	21020-0820	21020-0822	21020-0824	21020-0826	21020-0828	21020-0830	
14	21020-0140	21020-0142	21020-0144	21020-0146	21020-0148	21020-0150	21020-0152	21020-0154	21020-0156	21020-0158	21020-0160	
15	21020-0832	21020-0834	21020-0836	21020-0838	21020-0840	21020-0842	21020-0844	21020-0846	21020-0848	21020-0850	21020-0852	
16	21020-0162	21020-0164	21020-0166	21020-0168	21020-0170	21020-0172	21020-0174	21020-0176	21020-0178	21020-0180	21020-0182	
17	21020-0854	21020-0856	21020-0858	21020-0860	21020-0862	21020-0864	21020-0866	21020-0868	21020-0870	21020-0872	21020-0874	
18	21020-0184	21020-0186	21020-0188	21020-0190	21020-0192	21020-0194	21020-0196	21020-0198	21020-0200	21020-0202	21020-0204	
19	21020-0876	21020-0878	21020-0880	21020-0882	21020-0884	21020-0886	21020-0888	21020-0890	21020-0892	21020-0894	21020-0896	
20	21020-0206	21020-0208	21020-0210	21020-0212	21020-0214	21020-0216	21020-0218	21020-0220	21020-0222	21020-0224	21020-0226	
21	21020-0898	21020-0900	21020-0902	21020-0904	21020-0906	21020-0908	21020-0910	21020-0912	21020-0914	21020-0916	21020-0918	
22	21020-0228	21020-0230	21020-0232	21020-0234	21020-0236	21020-0238	21020-0240	21020-0242	21020-0244	21020-0246	21020-0248	
23	21020-0920	21020-0922	21020-0924	21020-0926	21020-0928	21020-0930	21020-0932	21020-0934	21020-0936	21020-0938	21020-0940	
24	21020-0250	21020-0252	21020-0254	21020-0256	21020-0258	21020-0260	21020-0262	21020-0264	21020-0266	21020-0268	21020-0270	
25	21020-0942	21020-0944	21020-0946	21020-0948	21020-0950	21020-0952	21020-0954	21020-0956	21020-0958	21020-0960	21020-0962	
26	21020-0272	21020-0274	21020-0276	21020-0278	21020-0280	21020-0282	21020-0284	21020-0286	21020-0288	21020-0290	21020-0292	
27	21020-0964	21020-0966	21020-0968	21020-0970	21020-0972	21020-0974	21020-0976	21020-0978	21020-0980	21020-0982	21020-0984	
28	21020-0294	21020-0296	21020-0298	21020-0300	21020-0302	21020-0304	21020-0306	21020-0308	21020-0310	21020-0312	21020-0314	
29	21020-0986	21020-0988	21020-0990	21020-0992	21020-0994	21020-0996	21020-0998	21020-1000	21020-1002	21020-1004	21020-1006	
30	21020-0316	21020-0318	21020-0320	21020-0322	21020-0324	21020-0326	21020-0328	21020-0330	21020-0332	21020-0334	21020-0336	
31	21020-1008	21020-1010	21020-1012	21020-1014	21020-1016	21020-1018	21020-1020	21020-1022	21020-1024	21020-1026	21020-1028	
32	21020-0338	21020-0340	21020-0342	21020-0344	21020-0346	21020-0348	21020-0350	21020-0352	21020-0354	21020-0356	21020-0358	
33	21020-1030	21020-1032	21020-1034	21020-1036	21020-1038	21020-1040	21020-1042	21020-1044	21020-1046	21020-1048	21020-1050	
34	21020-0360	21020-0362	21020-0364	21020-0366	21020-0368	21020-0370	21020-0372	21020-0374	21020-0376	21020-0378	21020-0380	
35	21020-1052	21020-1054	21020-1056	21020-1058	21020-1060	21020-1062	21020-1064	21020-1066	21020-1068	21020-1070	21020-1072	
36	21020-0382	21020-0384	21020-0386	21020-0388	21020-0390	21020-0392	21020-0394	21020-0396	21020-0398	21020-0400	21020-0402	
37	21020-1074	21020-1076	21020-1078	21020-1080	21020-1082	21020-1084	21020-1086	21020-1088	21020-1090	21020-1092	21020-1094	
38	21020-0404	21020-0406	21020-0408	21020-0410	21020-0412	21020-0414	21020-0416	21020-0418	21020-0420	21020-0422	21020-0424	
39	21020-1096	21020-1098	21020-1100	21020-1102	21020-1104	21020-1106	21020-1108	21020-1110	21020-1112	21020-1114	21020-1116	
40	21020-0426	21020-0428	21020-0430	21020-0432	21020-0434	21020-0436	21020-0438	21020-0440	21020-0442	21020-0444	21020-0446	

Custom jumpers available

0.50mm (.020") Pitch Premo-Flex™ Flat Flex Cable Jumpers

98266
Standard

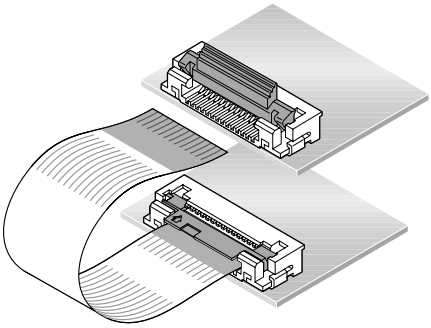

Molex introduces a complete line of 0.50mm (.020") pitch Flat Flex Cable jumpers. These jumpers are used to connect 2 PC boards and terminate to either ZIF or Non-ZIF FFC connectors.

Molex 0.50mm (.020") Flat Flex Cable jumpers are available in a wide variety of lengths and circuit sizes. These standard lengths are easy to order and feature shorter lead times.

We are also able to offer customized lengths and circuit sizes.

Reference Information

Product Specification: PS-98266-001
Packaging: Box
UL Style No.: 20706
Mates With: Any 0.50mm (.020") pitch Molex FFC/FPC connector
Designed In: Millimeters

Electrical

Voltage: 60V
Current: 0.5A

Physical

Strip Length: 4.0mm (.157")
Reinforcement Length: 8.0mm (.315")
Width: (N + 1) 0.50mm
Span: (N - 1) 0.50mm
Margin: 0.35mm (.014")
Conductor Width: 0.30mm (.012")
Conductor Thickness: 0.10mm (.004")
End Thickness: 0.30 ± 0.05mm (.012 ± .002")

Type A Jumpers—Contacts on same side (Preferred version in Europe)

Circuits	Order No. Overall Length 30mm (1.181")	5 mm (2.00")	76mm (3.00")	102mm (4.00")	127mm (5.00")	152mm (6.00")	178mm (7.00")	203mm (8.00")	229mm (9.00")	254mm (10.00")	305mm (12.00")	Lead-free
6	98266-0051	98266-0053	98266-0055	98266-0057	98266-0059	98266-0061	98266-0063	98266-0065	98266-0067	98266-0069	98266-0071	
7	98266-0745	98266-0747	98266-0749	98266-0751	98266-0753	98266-0755	98266-0757	98266-0759	98266-0761	98266-0763	98266-0765	
8	98266-0073	98266-0075	98266-0077	98266-0079	98266-0081	98266-0083	98266-0085	98266-0087	98266-0089	98266-0091	98266-0093	
9	98266-0767	98266-0769	98266-0771	98266-0773	98266-0775	98266-0777	98266-0779	98266-0781	98266-0783	98266-0785	98266-0787	
10	98266-0095	98266-0097	98266-0099	98266-0101	98266-0103	98266-0105	98266-0107	98266-0109	98266-0111	98266-0113	98266-0115	
11	98266-0789	98266-0791	98266-0793	98266-0795	98266-0797	98266-0799	98266-0801	98266-0803	98266-0805	98266-0807	98266-0809	
12	98266-0117	98266-0119	98266-0121	98266-0123	98266-0125	98266-0127	98266-0129	98266-0131	98266-0133	98266-0135	98266-0137	
13	98266-0811	98266-0813	98266-0815	98266-0817	98266-0819	98266-0821	98266-0823	98266-0825	98266-0827	98266-0829	98266-0831	
14	98266-0139	98266-0141	98266-0143	98266-0145	98266-0147	98266-0149	98266-0151	98266-0153	98266-0155	98266-0157	98266-0159	
15	98266-0833	98266-0835	98266-0837	98266-0839	98266-0841	98266-0843	98266-0845	98266-0847	98266-0849	98266-0851	98266-0853	
16	98266-0161	98266-0163	98266-0165	98266-0167	98266-0169	98266-0171	98266-0173	98266-0175	98266-0177	98266-0179	98266-0181	
17	98266-0855	98266-0857	98266-0859	98266-0861	98266-0863	98266-0865	98266-0867	98266-0869	98266-0871	98266-0873	98266-0875	
18	98266-0183	98266-0185	98266-0187	98266-0189	98266-0191	98266-0193	98266-0195	98266-0197	98266-0199	98266-0201	98266-0203	
19	98266-0877	98266-0879	98266-0881	98266-0883	98266-0885	98266-0887	98266-0889	98266-0891	98266-0893	98266-0895	98266-0897	
20	98266-0205	98266-0207	98266-0209	98266-0211	98266-0213	98266-0215	98266-0217	98266-0219	98266-0221	98266-0223	98266-0225	
21	98266-0899	98266-0901	98266-0903	98266-0905	98266-0907	98266-0909	98266-0911	98266-0913	98266-0915	98266-0917	98266-0919	
22	98266-0227	98266-0229	98266-0231	98266-0233	98266-0235	98266-0237	98266-0239	98266-0241	98266-0243	98266-0245	98266-0247	
23	98266-0921	98266-0923	98266-0925	98266-0927	98266-0929	98266-0931	98266-0933	98266-0935	98266-0937	98266-0939	98266-0941	
24	98266-0249	98266-0251	98266-0253	98266-0255	98266-0257	98266-0259	98266-0261	98266-0263	98266-0265	98266-0267	98266-0269	
25	98266-0943	98266-0945	98266-0947	98266-0949	98266-0951	98266-0953	98266-0955	98266-0957	98266-0959	98266-0961	98266-0963	
26	98266-0271	98266-0273	98266-0275	98266-0277	98266-0279	98266-0281	98266-0283	98266-0285	98266-0287	98266-0289	98266-0291	
27	98266-0965	98266-0967	98266-0969	98266-0971	98266-0973	98266-0975	98266-0977	98266-0979	98266-0981	98266-0983	98266-0985	
28	98266-0293	98266-0295	98266-0297	98266-0299	98266-0301	98266-0303	98266-0305	98266-0307	98266-0309	98266-0311	98266-0313	Yes
29	98266-0987	98266-0989	98266-0991	98266-0993	98266-0995	98266-0997	98266-0999	98266-1001	98266-1003	98266-1005	98266-1007	
30	98266-0315	98266-0317	98266-0319	98266-0321	98266-0323	98266-0325	98266-0327	98266-0329	98266-0331	98266-0333	98266-0335	
31	98266-1009	98266-1011	98266-1013	98266-1015	98266-1017	98266-1019	98266-1021	98266-1023	98266-1025	98266-1027	98266-1029	
32	98266-0337	98266-0339	98266-0341	98266-0343	98266-0345	98266-0347	98266-0349	98266-0351	98266-0353	98266-0355	98266-0357	
33	98266-1031	98266-1033	98266-1035	98266-1037	98266-1039	98266-1041	98266-1043	98266-1045	98266-1047	98266-1049	98266-1051	
34	98266-0359	98266-0361	98266-0363	98266-0365	98266-0367	98266-0369	98266-0371	98266-0373	98266-0375	98266-0377	98266-0379	
35	98266-1053	98266-1055	98266-1057	98266-1059	98266-1061	98266-1063	98266-1065	98266-1067	98266-1069	98266-1071	98266-1073	
36	98266-0381	98266-0383	98266-0385	98266-0387	98266-0389	98266-0391	98266-0393	98266-0395	98266-0397	98266-0399	98266-0401	
37	98266-1075	98266-1077	98266-1079	98266-1081	98266-1083	98266-1085	98266-1087	98266-1089	98266-1091	98266-1093	98266-1095	
38	98266-0403	98266-0405	98266-0407	98266-0409	98266-0411	98266-0413	98266-0415	98266-0417	98266-0419	98266-0421	98266-0423	
39	98266-1097	98266-1099	98266-1101	98266-1103	98266-1105	98266-1107	98266-1109	98266-1111	98266-1113	98266-1115	98266-1117	
40	98266-0425	98266-0427	98266-0429	98266-0431	98266-0433	98266-0435	98266-0437	98266-0439	98266-0441	98266-0443	98266-0445	
41	98266-1119	98266-1121	98266-1123	98266-1125	98266-1127	98266-1129	98266-1131	98266-1133	98266-1135	98266-1137	98266-1139	
42	98266-0447	98266-0449	98266-0451	98266-0453	98266-0455	98266-0457	98266-0459	98266-0461	98266-0463	98266-0465	98266-0467	
43	98266-1141	98266-1143	98266-1145	98266-1147	98266-1149	98266-1151	98266-1153	98266-1155	98266-1157	98266-1159	98266-1161	
44	98266-0469	98266-0471	98266-0473	98266-0475	98266-0477	98266-0479	98266-0481	98266-0483	98266-0485	98266-0487	98266-0489	
45	98266-1163	98266-1165	98266-1167	98266-1169	98266-1171	98266-1173	98266-1175	98266-1177	98266-1179	98266-1181	98266-1183	
46	98266-0491	98266-0493	98266-0495	98266-0497	98266-0499	98266-0501	98266-0503	98266-0505	98266-0507	98266-0509	98266-0511	
47	98266-1185	98266-1187	98266-1189	98266-1191	98266-1193	98266-1195	98266-1197	98266-1199	98266-1201	98266-1203	98266-1205	
48	98266-0513	98266-0515	98266-0517	98266-0519	98266-0521	98266-0523	98266-0525	98266-0527	98266-0529	98266-0531	98266-0533	
49	98266-1207	98266-1209	98266-1211	98266-1213	98266-1215	98266-1217	98266-1219	98266-1221	98266-1223	98266-1225	98266-1227	
50	98266-0535	98266-0537	98266-0539	98266-0541	98266-0543	98266-0545	98266-0547	98266-0549	98266-0551	98266-0553	98266-0555	

0.50mm (.020") Pitch Premo-Flex™ Flat Flex Cable Jumpers

98266
Standard

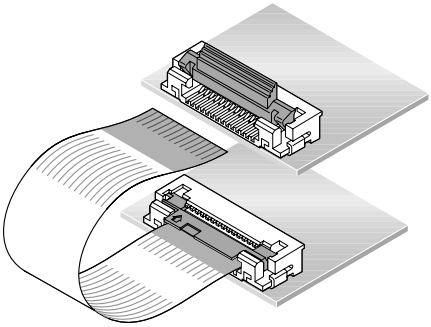

Molex introduces a complete line of 0.50mm (.020") pitch Flat Flex Cable jumpers. These jumpers are used to connect 2 PC boards and terminate to either ZIF or Non-ZIF FFC connectors.

Molex 0.50mm (.020") Flat Flex Cable jumpers are available in a wide variety of lengths and circuit sizes. These standard lengths are easy to order and feature shorter lead times.

We are also able to offer customized lengths and circuit sizes.

Reference Information

Product Specification: PS-98266-001
Packaging: Box
UL Style No.: 20706
Mates With: Any 0.50mm (.020") Pitch Molex FFC/FPC connector
Designed In: Millimeters

Electrical

Voltage: 60V
Current: 0.5A

Physical

Strip Length: 4.0mm (.157")
Reinforcement Length: 8.0mm (.315")
Width: (N + 1) 0.50mm
Span: (N - 1) 0.50mm
Margin: 0.35mm (.014")
Conductor Width: 0.30mm (.012")
Conductor Thickness: 0.10mm (.004")
End Thickness: 0.30 ± 0.05mm (.012 ± .002")

Type D Jumpers—Contacts on opposite sides (Preferred version in Europe)

Circuits	Order No.											Lead-free
	Overall Length											
	30 mm (1.181")	51 mm (2.00")	76mm (3.00")	102mm (4.00")	127mm (5.00")	152mm (6.00")	178mm (7.00")	203mm (8.00")	229mm (9.00")	254mm (10.00")	305mm (12.00")	
6	98266-0052	98266-0054	98266-0056	98266-0058	98266-0060	98266-0062	98266-0064	98266-0066	98266-0068	98266-0070	98266-0072	
7	98266-0744	98266-0746	98266-0748	98266-0750	98266-0752	98266-0754	98266-0756	98266-0758	98266-0760	98266-0762	98266-0764	
8	98266-0074	98266-0076	98266-0078	98266-0080	98266-0082	98266-0084	98266-0086	98266-0088	98266-0090	98266-0092	98266-0094	
9	98266-0766	98266-0768	98266-0770	98266-0772	98266-0774	98266-0776	98266-0778	98266-0780	98266-0782	98266-0784	98266-0786	
10	98266-0096	98266-0098	98266-0100	98266-0102	98266-0104	98266-0106	98266-0108	98266-0110	98266-0112	98266-0114	98266-0116	
11	98266-0788	98266-0790	98266-0792	98266-0794	98266-0796	98266-0798	98266-0800	98266-0802	98266-0804	98266-0806	98266-0808	
12	98266-0118	98266-0120	98266-0122	98266-0124	98266-0126	98266-0128	98266-0130	98266-0132	98266-0134	98266-0136	98266-0138	
13	98266-0810	98266-0812	98266-0814	98266-0816	98266-0818	98266-0820	98266-0822	98266-0824	98266-0826	98266-0828	98266-0830	
14	98266-0140	98266-0142	98266-0144	98266-0146	98266-0148	98266-0150	98266-0152	98266-0154	98266-0156	98266-0158	98266-0160	
15	98266-0832	98266-0834	98266-0836	98266-0838	98266-0840	98266-0842	98266-0844	98266-0846	98266-0848	98266-0850	98266-0852	
16	98266-0162	98266-0164	98266-0166	98266-0168	98266-0170	98266-0172	98266-0174	98266-0176	98266-0178	98266-0180	98266-0182	
17	98266-0854	98266-0856	98266-0858	98266-0860	98266-0862	98266-0864	98266-0866	98266-0868	98266-0870	98266-0872	98266-0874	
18	98266-0184	98266-0186	98266-0188	98266-0190	98266-0192	98266-0194	98266-0196	98266-0198	98266-0200	98266-0202	98266-0204	
19	98266-0876	98266-0878	98266-0880	98266-0882	98266-0884	98266-0886	98266-0888	98266-0890	98266-0892	98266-0894	98266-0896	
20	98266-0206	98266-0208	98266-0210	98266-0212	98266-0214	98266-0216	98266-0218	98266-0220	98266-0222	98266-0224	98266-0226	
21	98266-0898	98266-0900	98266-0902	98266-0904	98266-0906	98266-0908	98266-0910	98266-0912	98266-0914	98266-0916	98266-0918	
22	98266-0228	98266-0230	98266-0232	98266-0234	98266-0236	98266-0238	98266-0240	98266-0242	98266-0244	98266-0246	98266-0248	
23	98266-0920	98266-0922	98266-0924	98266-0926	98266-0928	98266-0930	98266-0932	98266-0934	98266-0936	98266-0938	98266-0940	
24	98266-0250	98266-0252	98266-0254	98266-0256	98266-0258	98266-0260	98266-0262	98266-0264	98266-0266	98266-0268	98266-0270	
25	98266-0942	98266-0944	98266-0946	98266-0948	98266-0950	98266-0952	98266-0954	98266-0956	98266-0958	98266-0960	98266-0962	
26	98266-0272	98266-0274	98266-0276	98266-0278	98266-0280	98266-0282	98266-0284	98266-0286	98266-0288	98266-0290	98266-0292	
27	98266-0964	98266-0966	98266-0968	98266-0970	98266-0972	98266-0974	98266-0976	98266-0978	98266-0980	98266-0982	98266-0984	
28	98266-0294	98266-0296	98266-0298	98266-0300	98266-0302	98266-0304	98266-0306	98266-0308	98266-0310	98266-0312	98266-0314	Yes
29	98266-0986	98266-0988	98266-0990	98266-0992	98266-0994	98266-0996	98266-0998	98266-1000	98266-1002	98266-1004	98266-1006	
30	98266-0316	98266-0318	98266-0320	98266-0322	98266-0324	98266-0326	98266-0328	98266-0330	98266-0332	98266-0334	98266-0336	
31	98266-1008	98266-1010	98266-1012	98266-1014	98266-1016	98266-1018	98266-1020	98266-1022	98266-1024	98266-1026	98266-1028	
32	98266-0338	98266-0340	98266-0342	98266-0344	98266-0346	98266-0348	98266-0350	98266-0352	98266-0354	98266-0356	98266-0358	
33	98266-1030	98266-1032	98266-1034	98266-1036	98266-1038	98266-1040	98266-1042	98266-1044	98266-1046	98266-1048	98266-1050	
34	98266-0360	98266-0362	98266-0364	98266-0366	98266-0368	98266-0370	98266-0372	98266-0374	98266-0376	98266-0378	98266-0380	
35	98266-1052	98266-1054	98266-1056	98266-1058	98266-1060	98266-1062	98266-1064	98266-1066	98266-1068	98266-1070	98266-1072	
36	98266-0382	98266-0384	98266-0386	98266-0388	98266-0390	98266-0392	98266-0394	98266-0396	98266-0398	98266-0400	98266-0402	
37	98266-1074	98266-1076	98266-1078	98266-1080	98266-1082	98266-1084	98266-1086	98266-1088	98266-1090	98266-1092	98266-1094	
38	98266-0404	98266-0406	98266-0408	98266-0410	98266-0412	98266-0414	98266-0416	98266-0418	98266-0420	98266-0422	98266-0424	
39	98266-1096	98266-1098	98266-1100	98266-1102	98266-1104	98266-1106	98266-1108	98266-1110	98266-1112	98266-1114	98266-1116	
40	98266-0426	98266-0428	98266-0430	98266-0432	98266-0434	98266-0436	98266-0438	98266-0440	98266-0442	98266-0444	98266-0446	
41	98266-1118	98266-1120	98266-1122	98266-1124	98266-1126	98266-1128	98266-1130	98266-1132	98266-1134	98266-1136	98266-1138	
42	98266-0448	98266-0450	98266-0452	98266-0454	98266-0456	98266-0458	98266-0460	98266-0462	98266-0464	98266-0466	98266-0468	
43	98266-1140	98266-1142	98266-1144	98266-1146	98266-1148	98266-1150	98266-1152	98266-1154	98266-1156	98266-1158	98266-1160	
44	98266-0470	98266-0472	98266-0474	98266-0476	98266-0478	98266-0480	98266-0482	98266-0484	98266-0486	98266-0488	98266-0490	
45	98266-1162	98266-1164	98266-1166	98266-1168	98266-1170	98266-1172	98266-1174	98266-1176	98266-1178	98266-1180	98266-1182	
46	98266-0492	98266-0494	98266-0496	98266-0498	98266-0500	98266-0502	98266-0504	98266-0506	98266-0508	98266-0510	98266-0512	
47	98266-1184	98266-1186	98266-1188	98266-1190	98266-1192	98266-1194	98266-1196	98266-1198	98266-1200	98266-1202	98266-1204	
48	98266-0514	98266-0516	98266-0518	98266-0520	98266-0522	98266-0524	98266-0526	98266-0528	98266-0530	98266-0532	98266-0534	
49	98266-1206	98266-1208	98266-1210	98266-1212	98266-1214	98266-1216	98266-1218	98266-1220	98266-1222	98266-1224	98266-1226	
50	98266-0536	98266-0538	98266-0540	98266-0542	98266-0544	98266-0546	98266-0548	98266-0550	98266-0552	98266-0554	98266-0556	

1.00mm (.039") Pitch Premo-Flex™ Flat Flex Cable Jumpers

21039
Standard

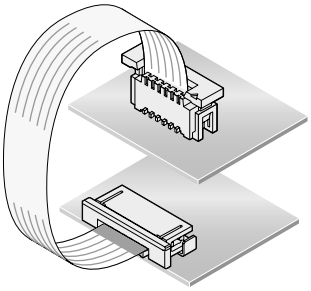

Molex introduces a complete line of 1.00mm (.039") pitch Flat Flex Cable jumpers. These jumpers are used to connect 2 PC boards and terminate to either ZIF or Non-ZIF FFC Connectors.

Molex 1.00mm (.039") Flat Flex Cable jumpers are available in a wide variety of lengths and circuit sizes. These standard lengths are easy to order and feature shorter lead times.

Reference Information

UL Style No.: 2896
Mates With: Any 1.00mm (.039") pitch Molex FFC/FPC connector
Designed In: Millimeters

Electrical

Voltage: 30V
Current: 1.2A

Physical

Strip Length: 4.0mm (.157")
Reinforcement Length: 8.00mm (.315")
Width: (N + 1) 1.00mm
Span: (N - 1) 1.00mm
Margin: 0.65mm (.026")
Conductor Width: 0.70mm (.028")
Conductor Thickness: 0.10mm (.004")
End Thickness: 0.30 ±0.05mm (.012 ±.002")

Type A FFC Jumpers—Contacts on same side (Preferred version in North America)

Circuits	Order No.											Lead-free
	Overall Length											
	30.00mm (1.181")	51.00mm (2.00")	76.00mm (3.00")	102.00mm (4.00")	127.00mm (5.00")	152.00mm (6.00")	178.00mm (7.00")	203.00mm (8.00")	229.00mm (9.00")	254.00mm (10.00")	305.00mm (12.00")	
4	21039-0701	21039-0703	21039-0705	21039-0707	21039-0709	21039-0711	21039-0713	21039-0715	21039-0717	21039-0719	21039-0721	Yes
5	21039-0723	21039-0725	21039-0727	21039-0729	21039-0731	21039-0733	21039-0735	21039-0737	21039-0739	21039-0741	21039-0743	
6	21039-0201	21039-0203	21039-0205	21039-0207	21039-0209	21039-0211	21039-0213	21039-0215	21039-0217	21039-0219	21039-0221	
7	21039-0745	21039-0747	21039-0749	21039-0751	21039-0753	21039-0755	21039-0757	21039-0759	21039-0761	21039-0763	21039-0765	
8	21039-0223	21039-0225	21039-0227	21039-0229	21039-0231	21039-0233	21039-0235	21039-0237	21039-0239	21039-0241	21039-0243	
9	21039-0767	21039-0769	21039-0771	21039-0773	21039-0775	21039-0777	21039-0779	21039-0781	21039-0783	21039-0785	21039-0787	
10	21039-0245	21039-0247	21039-0249	21039-0251	21039-0253	21039-0255	21039-0257	21039-0259	21039-0261	21039-0263	21039-0265	
11	21039-0789	21039-0791	21039-0793	21039-0795	21039-0797	21039-0799	21039-0801	21039-0803	21039-0805	21039-0807	21039-0809	
12	21039-0267	21039-0269	21039-0271	21039-0273	21039-0275	21039-0277	21039-0279	21039-0281	21039-0283	21039-0285	21039-0287	
13	21039-0811	21039-0813	21039-0815	21039-0817	21039-0819	21039-0821	21039-0823	21039-0825	21039-0827	21039-0829	21039-0831	
14	21039-0289	21039-0291	21039-0293	21039-0295	21039-0297	21039-0299	21039-0301	21039-0303	21039-0305	21039-0307	21039-0309	
15	21039-0833	21039-0835	21039-0837	21039-0839	21039-0841	21039-0843	21039-0845	21039-0847	21039-0849	21039-0851	21039-0853	
16	21039-0311	21039-0313	21039-0315	21039-0317	21039-0319	21039-0321	21039-0323	21039-0325	21039-0327	21039-0329	21039-0331	
17	21039-0855	21039-0857	21039-0859	21039-0861	21039-0863	21039-0865	21039-0867	21039-0869	21039-0871	21039-0873	21039-0875	
18	21039-0333	21039-0335	21039-0337	21039-0339	21039-0341	21039-0343	21039-0345	21039-0347	21039-0349	21039-0351	21039-0353	
19	21039-0877	21039-0879	21039-0881	21039-0883	21039-0885	21039-0887	21039-0889	21039-0891	21039-0893	21039-0895	21039-0897	
20	21039-0355	21039-0357	21039-0359	21039-0361	21039-0363	21039-0365	21039-0367	21039-0369	21039-0371	21039-0373	21039-0375	
21	21039-0899	21039-0901	21039-0903	21039-0905	21039-0907	21039-0909	21039-0911	21039-0913	21039-0915	21039-0917	21039-0919	
22	21039-0377	21039-0379	21039-0381	21039-0383	21039-0385	21039-0387	21039-0389	21039-0391	21039-0393	21039-0395	21039-0397	
23	21039-0921	21039-0923	21039-0925	21039-0927	21039-0929	21039-0931	21039-0933	21039-0935	21039-0937	21039-0939	21039-0941	
24	21039-0399	21039-0401	21039-0403	21039-0405	21039-0407	21039-0409	21039-0411	21039-0413	21039-0415	21039-0417	21039-0419	
25	21039-0943	21039-0945	21039-0947	21039-0949	21039-0951	21039-0953	21039-0955	21039-0957	21039-0959	21039-0961	21039-0963	
26	21039-0421	21039-0423	21039-0425	21039-0427	21039-0429	21039-0431	21039-0433	21039-0435	21039-0437	21039-0439	21039-0441	
27	21039-0965	21039-0967	21039-0969	21039-0971	21039-0973	21039-0975	21039-0977	21039-0979	21039-0981	21039-0983	21039-0985	
28	21039-0443	21039-0445	21039-0447	21039-0449	21039-0451	21039-0453	21039-0455	21039-0457	21039-0459	21039-0461	21039-0463	
29	21039-0987	21039-0989	21039-0991	21039-0993	21039-0995	21039-0997	21039-0999	21039-1001	21039-1003	21039-1005	21039-1007	
30	21039-0465	21039-0467	21039-0469	21039-0471	21039-0473	21039-0475	21039-0477	21039-0479	21039-0481	21039-0483	21039-0485	
31	21039-1009	21039-1011	21039-1013	21039-1015	21039-1017	21039-1019	21039-1021	21039-1023	21039-1025	21039-1027	21039-1029	
32	21039-0487	21039-0489	21039-0491	21039-0493	21039-0495	21039-0497	21039-0499	21039-0501	21039-0503	21039-0505	21039-0507	
33	21039-1031	21039-1033	21039-1035	21039-1037	21039-1039	21039-1041	21039-1043	21039-1045	21039-1047	21039-1049	21039-1051	
34	21039-0509	21039-0511	21039-0513	21039-0515	21039-0517	21039-0519	21039-0521	21039-0523	21039-0525	21039-0527	21039-0529	
35	21039-1053	21039-1055	21039-1057	21039-1059	21039-1061	21039-1063	21039-1065	21039-1067	21039-1069	21039-1071	21039-1073	
36	21039-0531	21039-0533	21039-0535	21039-0537	21039-0539	21039-0541	21039-0543	21039-0545	21039-0547	21039-0549	21039-0551	
37	21039-1075	21039-1077	21039-1079	21039-1081	21039-1083	21039-1085	21039-1087	21039-1089	21039-1091	21039-1093	21039-1095	
38	21039-0553	21039-0555	21039-0557	21039-0559	21039-0561	21039-0563	21039-0565	21039-0567	21039-0569	21039-0571	21039-0573	
39	21039-1097	21039-1099	21039-1101	21039-1103	21039-1105	21039-1107	21039-1109	21039-1111	21039-1113	21039-1115	21039-1117	
40	21039-0575	21039-0577	21039-0579	21039-0581	21039-0583	21039-0585	21039-0587	21039-0589	21039-0591	21039-0593	21039-0595	

Custom jumpers available

1.00mm (.039") Pitch Premo-Flex™ Flat Flex Cable Jumpers

21039
Standard

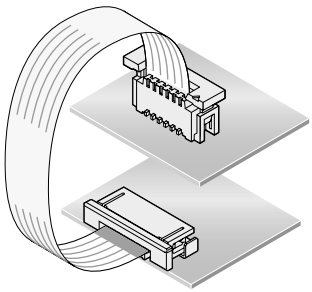

Molex introduces a complete line of 1.00mm (.039") pitch Flat Flex Cable jumpers. These jumpers are used to connect 2 PC boards and terminate to either ZIF or Non-ZIF FFC Connectors.

Molex 1.00mm (.039") Flat Flex Cable jumpers are available in a wide variety of lengths and circuit sizes. These standard lengths are easy to order and feature shorter lead times.

Reference Information

UL Style No.: 2896
Mates With: Any 1.00mm (.039") pitch Molex FFC/FPC connector
Designed In: Millimeters

Electrical

Voltage: 30V
Current: 1.2A

Physical

Strip Length: 4.0mm (.157")
Reinforcement Length: 8.00mm (.315")
Width: (N + 1) 1.00mm
Span: (N - 1) 1.00mm
Margin: 0.65mm (.026")
Conductor Width: 0.70mm (.028")
Conductor Thickness: 0.10mm (.004")
End Thickness: 0.30 ± 0.05mm (.012 ± .002")

Type D FFC Jumpers—Contacts on opposite sides (Preferred version in North America)

Circuits	Order No.											Lead-free
	Overall Length											
	30.00mm (1.181")	51.00mm (2.00")	76.00mm (3.00")	102.00mm (4.00")	127.00mm (5.00")	152.00mm (6.00")	178.00mm (7.00")	203.00mm (8.00")	229.00mm (9.00")	254.00mm (10.00")	305.00mm (12.00")	
4	21039-0700	21039-0702	21039-0704	21039-0706	21039-0708	21039-0710	21039-0712	21039-0714	21039-0716	21039-0718	21039-0720	Yes
5	21039-0722	21039-0724	21039-0726	21039-0728	21039-0730	21039-0732	21039-0734	21039-0736	21039-0738	21039-0740	21039-0742	
6	21039-0202	21039-0204	21039-0206	21039-0208	21039-0210	21039-0212	21039-0214	21039-0216	21039-0218	21039-0220	21039-0222	
7	21039-0744	21039-0746	21039-0748	21039-0750	21039-0752	21039-0754	21039-0756	21039-0758	21039-0760	21039-0762	21039-0764	
8	21039-0224	21039-0226	21039-0228	21039-0230	21039-0232	21039-0234	21039-0236	21039-0238	21039-0240	21039-0242	21039-0244	
9	21039-0766	21039-0768	21039-0770	21039-0772	21039-0774	21039-0776	21039-0778	21039-0780	21039-0782	21039-0784	21039-0786	
10	21039-0246	21039-0248	21039-0250	21039-0252	21039-0254	21039-0256	21039-0258	21039-0260	21039-0262	21039-0264	21039-0266	
11	21039-0788	21039-0790	21039-0792	21039-0794	21039-0796	21039-0798	21039-0800	21039-0802	21039-0804	21039-0806	21039-0808	
12	21039-0268	21039-0270	21039-0272	21039-0274	21039-0276	21039-0278	21039-0280	21039-0282	21039-0284	21039-0286	21039-0288	
13	21039-0810	21039-0812	21039-0814	21039-0816	21039-0818	21039-0820	21039-0822	21039-0824	21039-0826	21039-0828	21039-0830	
14	21039-0290	21039-0292	21039-0294	21039-0296	21039-0298	21039-0300	21039-0302	21039-0304	21039-0306	21039-0308	21039-0310	
15	21039-0832	21039-0834	21039-0836	21039-0838	21039-0840	21039-0842	21039-0844	21039-0846	21039-0848	21039-0850	21039-0852	
16	21039-0312	21039-0314	21039-0316	21039-0318	21039-0320	21039-0322	21039-0324	21039-0326	21039-0328	21039-0330	21039-0332	
17	21039-0854	21039-0856	21039-0858	21039-0860	21039-0862	21039-0864	21039-0866	21039-0868	21039-0870	21039-0872	21039-0874	
18	21039-0334	21039-0336	21039-0338	21039-0340	21039-0342	21039-0344	21039-0346	21039-0348	21039-0350	21039-0352	21039-0354	
19	21039-0876	21039-0878	21039-0880	21039-0882	21039-0884	21039-0886	21039-0888	21039-0890	21039-0892	21039-0894	21039-0896	
20	21039-0356	21039-0358	21039-0360	21039-0362	21039-0364	21039-0366	21039-0368	21039-0370	21039-0372	21039-0374	21039-0376	
21	21039-0898	21039-0900	21039-0902	21039-0904	21039-0906	21039-0908	21039-0910	21039-0912	21039-0914	21039-0916	21039-0918	
22	21039-0378	21039-0380	21039-0382	21039-0384	21039-0386	21039-0388	21039-0390	21039-0392	21039-0394	21039-0396	21039-0398	
23	21039-0920	21039-0922	21039-0924	21039-0926	21039-0928	21039-0930	21039-0932	21039-0934	21039-0936	21039-0938	21039-0940	
24	21039-0400	21039-0402	21039-0404	21039-0406	21039-0408	21039-0410	21039-0412	21039-0414	21039-0416	21039-0418	21039-0420	
25	21039-0942	21039-0944	21039-0946	21039-0948	21039-0950	21039-0952	21039-0954	21039-0956	21039-0958	21039-0960	21039-0962	
26	21039-0422	21039-0424	21039-0426	21039-0428	21039-0430	21039-0432	21039-0434	21039-0436	21039-0438	21039-0440	21039-0442	
27	21039-0964	21039-0966	21039-0968	21039-0970	21039-0972	21039-0974	21039-0976	21039-0978	21039-0980	21039-0982	21039-0984	
28	21039-0444	21039-0446	21039-0448	21039-0450	21039-0452	21039-0454	21039-0456	21039-0458	21039-0460	21039-0462	21039-0464	
29	21039-0986	21039-0988	21039-0990	21039-0992	21039-0994	21039-0996	21039-0998	21039-1000	21039-1002	21039-1004	21039-1006	
30	21039-0466	21039-0468	21039-0470	21039-0472	21039-0474	21039-0476	21039-0478	21039-0480	21039-0482	21039-0484	21039-0486	
31	21039-1008	21039-1010	21039-1012	21039-1014	21039-1016	21039-1018	21039-1020	21039-1022	21039-1024	21039-1026	21039-1028	
32	21039-0488	21039-0490	21039-0492	21039-0494	21039-0496	21039-0498	21039-0500	21039-0502	21039-0504	21039-0506	21039-0508	
33	21039-1030	21039-1032	21039-1034	21039-1036	21039-1038	21039-1040	21039-1042	21039-1044	21039-1046	21039-1048	21039-1050	
34	21039-0510	21039-0512	21039-0514	21039-0516	21039-0518	21039-0520	21039-0522	21039-0524	21039-0526	21039-0528	21039-0530	
35	21039-1052	21039-1054	21039-1056	21039-1058	21039-1060	21039-1062	21039-1064	21039-1066	21039-1068	21039-1070	21039-1072	
36	21039-0532	21039-0534	21039-0536	21039-0538	21039-0540	21039-0542	21039-0544	21039-0546	21039-0548	21039-0550	21039-0552	
37	21039-1074	21039-1076	21039-1078	21039-1080	21039-1082	21039-1084	21039-1086	21039-1088	21039-1090	21039-1092	21039-1094	
38	21039-0554	21039-0556	21039-0558	21039-0560	21039-0562	21039-0564	21039-0566	21039-0568	21039-0570	21039-0572	21039-0574	
39	21039-1096	21039-1098	21039-1100	21039-1102	21039-1104	21039-1106	21039-1108	21039-1110	21039-1112	21039-1114	21039-1116	
40	21039-0576	21039-0578	21039-0580	21039-0582	21039-0584	21039-0586	21039-0588	21039-0590	21039-0592	21039-0594	21039-0596	

Custom jumpers available

1.00mm (.039") Pitch Premo-Flex™ Flat Flex Cable Jumpers

98267
Standard

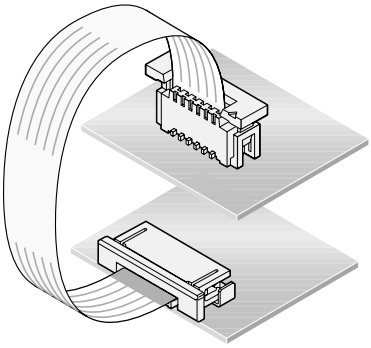

Molex introduces a complete line of 1.00mm (.039") pitch Flat Flex Cable jumpers. These jumpers are used to connect 2 PC boards and terminate to either ZIF or Non-ZIF FFC connectors.

Molex 1.00mm (.020") Flat Flex Cable jumpers are available in a wide variety of lengths and circuit sizes. These standard lengths are easy to order and feature shorter lead times.

We are also able to offer customized lengths and circuit sizes.

Reference Information

Product Specification: PS-98267-001
Packaging: Box
UL Style No.: 20706
Mates With: Any 1.00mm (.039") Pitch Molex FFC/FPC connector
Designed In: Millimeters

Electrical

Voltage: 60V
Current: 1.2A

Physical

Strip Length: 4.0mm (.157")
Reinforcement Length: 8.0mm (.315")
Width: (N + 1) 1.00mm
Span: (N - 1) 1.00mm
Margin: 0.65mm (.014")
Conductor Width: 0.70mm (.012")
Conductor Thickness: 0.10mm (.004")
End Thickness: 0.30 ± 0.05mm (.012 ± .002")

Type A Jumpers—Contacts on same side (Preferred version in Europe)

Circuits	Order No.											Lead-free
	Overall Length											
	30mm (1.181")	51mm (2.00")	76mm (3.00")	102mm (4.00")	127mm (5.00")	152mm (6.00")	178mm (7.00")	203mm (8.00")	229mm (9.00")	254mm (10.00")	305mm (12.00")	
4	98267-0701	98267-0703	98267-0705	98267-0707	98267-0709	98267-0711	98267-0713	98267-0715	98267-0717	98267-0719	98267-0721	Yes
5	98267-0723	98267-0725	98267-0727	98267-0729	98267-0731	98267-0733	98267-0735	98267-0737	98267-0739	98267-0741	98267-0743	
6	98267-0201	98267-0203	98267-0205	98267-0207	98267-0209	98267-0211	98267-0213	98267-0215	98267-0217	98267-0219	98267-0221	
7	98267-0745	98267-0747	98267-0749	98267-0751	98267-0753	98267-0755	98267-0757	98267-0759	98267-0761	98267-0763	98267-0765	
8	98267-0223	98267-0225	98267-0227	98267-0229	98267-0231	98267-0233	98267-0235	98267-0237	98267-0239	98267-0241	98267-0243	
9	98267-0767	98267-0769	98267-0771	98267-0773	98267-0775	98267-0777	98267-0779	98267-0781	98267-0783	98267-0785	98267-0787	
10	98267-0245	98267-0247	98267-0249	98267-0251	98267-0253	98267-0255	98267-0257	98267-0259	98267-0261	98267-0263	98267-0265	
11	98267-0789	98267-0791	98267-0793	98267-0795	98267-0797	98267-0799	98267-0801	98267-0803	98267-0805	98267-0807	98267-0809	
12	98267-0267	98267-0269	98267-0271	98267-0273	98267-0275	98267-0277	98267-0279	98267-0281	98267-0283	98267-0285	98267-0287	
13	98267-0811	98267-0813	98267-0815	98267-0817	98267-0819	98267-0821	98267-0823	98267-0825	98267-0827	98267-0829	98267-0831	
14	98267-0289	98267-0291	98267-0293	98267-0295	98267-0297	98267-0299	98267-0301	98267-0303	98267-0305	98267-0307	98267-0309	
15	98267-0833	98267-0835	98267-0837	98267-0839	98267-0841	98267-0843	98267-0845	98267-0847	98267-0849	98267-0851	98267-0853	
16	98267-0311	98267-0313	98267-0315	98267-0317	98267-0319	98267-0321	98267-0323	98267-0325	98267-0327	98267-0329	98267-0331	
17	98267-0855	98267-0857	98267-0859	98267-0861	98267-0863	98267-0865	98267-0867	98267-0869	98267-0871	98267-0873	98267-0875	
18	98267-0333	98267-0335	98267-0337	98267-0339	98267-0341	98267-0343	98267-0345	98267-0347	98267-0349	98267-0351	98267-0353	
19	98267-0877	98267-0879	98267-0881	98267-0883	98267-0885	98267-0887	98267-0889	98267-0891	98267-0893	98267-0895	98267-0897	
20	98267-0355	98267-0357	98267-0359	98267-0361	98267-0363	98267-0365	98267-0367	98267-0369	98267-0371	98267-0373	98267-0375	
21	98267-0899	98267-0901	98267-0903	98267-0905	98267-0907	98267-0909	98267-0911	98267-0913	98267-0915	98267-0917	98267-0919	
22	98267-0377	98267-0379	98267-0381	98267-0383	98267-0385	98267-0387	98267-0389	98267-0391	98267-0393	98267-0395	98267-0397	
23	98267-0921	98267-0923	98267-0925	98267-0927	98267-0929	98267-0931	98267-0933	98267-0935	98267-0937	98267-0939	98267-0941	
24	98267-0399	98267-0401	98267-0403	98267-0405	98267-0407	98267-0409	98267-0411	98267-0413	98267-0415	98267-0417	98267-0419	
25	98267-0943	98267-0945	98267-0947	98267-0949	98267-0951	98267-0953	98267-0955	98267-0957	98267-0959	98267-0961	98267-0963	
26	98267-0421	98267-0423	98267-0425	98267-0427	98267-0429	98267-0431	98267-0433	98267-0435	98267-0437	98267-0439	98267-0441	
27	98267-0965	98267-0967	98267-0969	98267-0971	98267-0973	98267-0975	98267-0977	98267-0979	98267-0981	98267-0983	98267-0985	
28	98267-0443	98267-0445	98267-0447	98267-0449	98267-0451	98267-0453	98267-0455	98267-0457	98267-0459	98267-0461	98267-0463	
29	98267-0987	98267-0989	98267-0991	98267-0993	98267-0995	98267-0997	98267-0999	98267-1001	98267-1003	98267-1005	98267-1007	
30	98267-0465	98267-0467	98267-0469	98267-0471	98267-0473	98267-0475	98267-0477	98267-0479	98267-0481	98267-0483	98267-0485	
31	98267-1009	98267-1011	98267-1013	98267-1015	98267-1017	98267-1019	98267-1021	98267-1023	98267-1025	98267-1027	98267-1029	
32	98267-0487	98267-0489	98267-0491	98267-0493	98267-0495	98267-0497	98267-0499	98267-0501	98267-0503	98267-0505	98267-0507	
33	98267-1031	98267-1033	98267-1035	98267-1037	98267-1039	98267-1041	98267-1043	98267-1045	98267-1047	98267-1049	98267-1051	
34	98267-0509	98267-0511	98267-0513	98267-0515	98267-0517	98267-0519	98267-0521	98267-0523	98267-0525	98267-0527	98267-0529	
35	98267-1053	98267-1055	98267-1057	98267-1059	98267-1061	98267-1063	98267-1065	98267-1067	98267-1069	98267-1071	98267-1073	
36	98267-0531	98267-0533	98267-0535	98267-0537	98267-0539	98267-0541	98267-0543	98267-0545	98267-0547	98267-0549	98267-0551	
37	98267-1075	98267-1077	98267-1079	98267-1081	98267-1083	98267-1085	98267-1087	98267-1089	98267-1091	98267-1093	98267-1095	
38	98267-0553	98267-0555	98267-0557	98267-0559	98267-0561	98267-0563	98267-0565	98267-0567	98267-0569	98267-0571	98267-0573	
39	98267-1097	98267-1099	98267-1101	98267-1103	98267-1105	98267-1107	98267-1109	98267-1111	98267-1113	98267-1115	98267-1117	
40	98267-0575	98267-0577	98267-0579	98267-0581	98267-0583	98267-0585	98267-0587	98267-0589	98267-0591	98267-0593	98267-0595	

1.00mm (.039") Pitch Premo-Flex™ Flat Flex Cable Jumpers

98267
Standard

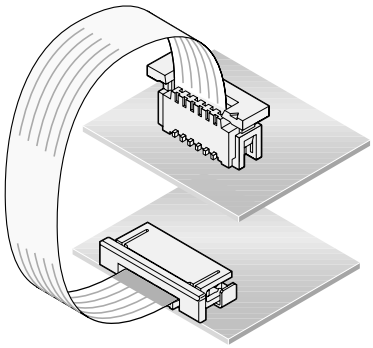

Molex introduces a complete line of 1.00mm (.039") pitch Flat Flex Cable jumpers. These jumpers are used to connect 2 PC boards and terminate to either ZIF or Non-ZIF FFC connectors.

Molex 1.00mm (.020") Flat Flex Cable jumpers are available in a wide variety of lengths and circuit sizes. These standard lengths are easy to order and feature shorter lead times.

We are also able to offer customized lengths and circuit sizes.

Reference Information

Product Specification: PS-98267-001
Packaging: Box
UL Style No.: 20706
Mates With: Any 1.00mm (.039") Pitch Molex FFC/FPC connector
Designed In: Millimeters

Electrical

Voltage: 60V
Current: 1.2A

Physical

Strip Length: 4.0mm (.157")
Reinforcement Length: 8.0mm (.315")
Width: (N + 1) 1.00mm
Span: (N - 1) 1.00mm
Margin: 0.65mm (.014")
Conductor Width: 0.70mm (.012")
Conductor Thickness: 0.10mm (.004")
End Thickness: 0.30 ± 0.05mm (.012 ± .002")

Type D Jumpers—Contacts on opposite side (Preferred version in Europe)

Circuits	Order No.											Lead-free
	Overall Length											
	30mm (1.181")	51mm (2.00")	76mm (3.00")	102mm (4.00")	127mm (5.00")	152mm (6.00")	178mm (7.00")	203mm (8.00")	229mm (9.00")	254mm (10.00")	305mm (12.00")	
4	98267-0700	98267-0702	98267-0704	98267-0706	98267-0708	98267-0710	98267-0712	98267-0714	98267-0716	98267-0718	98267-0720	
5	98267-0722	98267-0724	98267-0726	98267-0728	98267-0730	98267-0732	98267-0734	98267-0736	98267-0738	98267-0740	98267-0742	
6	98267-0202	98267-0204	98267-0206	98267-0208	98267-0210	98267-0212	98267-0214	98267-0216	98267-0218	98267-0220	98267-0222	
7	98267-0744	98267-0746	98267-0748	98267-0750	98267-0752	98267-0754	98267-0756	98267-0758	98267-0760	98267-0762	98267-0764	
8	98267-0224	98267-0226	98267-0228	98267-0230	98267-0232	98267-0234	98267-0236	98267-0238	98267-0240	98267-0242	98267-0244	
9	98267-0766	98267-0768	98267-0770	98267-0772	98267-0774	98267-0776	98267-0778	98267-0780	98267-0782	98267-0784	98267-0786	
10	98267-0246	98267-0248	98267-0250	98267-0252	98267-0254	98267-0256	98267-0258	98267-0260	98267-0262	98267-0264	98267-0266	
11	98267-0788	98267-0790	98267-0792	98267-0794	98267-0796	98267-0798	98267-0800	98267-0802	98267-0804	98267-0806	98267-0808	
12	98267-0268	98267-0270	98267-0272	98267-0274	98267-0276	98267-0278	98267-0280	98267-0282	98267-0284	98267-0286	98267-0288	
13	98267-0810	98267-0812	98267-0814	98267-0816	98267-0818	98267-0820	98267-0822	98267-0824	98267-0826	98267-0828	98267-0830	
14	98267-0290	98267-0292	98267-0294	98267-0296	98267-0298	98267-0300	98267-0302	98267-0304	98267-0306	98267-0308	98267-0310	
15	98267-0832	98267-0834	98267-0836	98267-0838	98267-0840	98267-0842	98267-0844	98267-0846	98267-0848	98267-0850	98267-0852	
16	98267-0312	98267-0314	98267-0315	98267-0318	98267-0320	98267-0322	98267-0324	98267-0326	98267-0328	98267-0330	98267-0332	
17	98267-0854	98267-0856	98267-0858	98267-0860	98267-0862	98267-0864	98267-0866	98267-0868	98267-0870	98267-0872	98267-0874	
18	98267-0334	98267-0336	98267-0338	98267-0340	98267-0342	98267-0344	98267-0346	98267-0348	98267-0350	98267-0352	98267-0354	
19	98267-0876	98267-0878	98267-0880	98267-0882	98267-0884	98267-0886	98267-0888	98267-0890	98267-0892	98267-0894	98267-0896	
20	98267-0356	98267-0358	98267-0360	98267-0362	98267-0364	98267-0366	98267-0368	98267-0370	98267-0372	98267-0374	98267-0376	
21	98267-0898	98267-0900	98267-0902	98267-0904	98267-0906	98267-0908	98267-0910	98267-0912	98267-0914	98267-0916	98267-0918	
22	98267-0378	98267-0380	98267-0382	98267-0384	98267-0386	98267-0388	98267-0390	98267-0392	98267-0394	98267-0396	98267-0398	Yes
23	98267-0920	98267-0922	98267-0924	98267-0926	98267-0928	98267-0930	98267-0932	98267-0934	98267-0936	98267-0938	98267-0940	
24	98267-0400	98267-0402	98267-0404	98267-0406	98267-0408	98267-0410	98267-0412	98267-0414	98267-0416	98267-0418	98267-0420	
25	98267-0942	98267-0944	98267-0946	98267-0948	98267-0950	98267-0952	98267-0954	98267-0956	98267-0958	98267-0960	98267-0962	
26	98267-0422	98267-0424	98267-0426	98267-0428	98267-0430	98267-0432	98267-0434	98267-0436	98267-0438	98267-0440	98267-0442	
27	98267-0964	98267-0966	98267-0968	98267-0970	98267-0972	98267-0974	98267-0976	98267-0978	98267-0980	98267-0982	98267-0984	
28	98267-0444	98267-0446	98267-0448	98267-0450	98267-0452	98267-0454	98267-0456	98267-0458	98267-0460	98267-0462	98267-0464	
29	98267-0986	98267-0988	98267-0990	98267-0992	98267-0994	98267-0996	98267-0998	98267-1000	98267-1002	98267-1004	98267-1006	
30	98267-0466	98267-0468	98267-0470	98267-0472	98267-0474	98267-0476	98267-0478	98267-0480	98267-0482	98267-0484	98267-0486	
31	98267-1008	98267-1010	98267-1012	98267-1014	98267-1016	98267-1018	98267-1020	98267-1022	98267-1024	98267-1026	98267-1028	
32	21039-0488	98267-0490	98267-0492	98267-0494	98267-0496	98267-0498	98267-0500	98267-0502	98267-0504	98267-0506	98267-0508	
33	98267-1030	98267-1032	98267-1034	98267-1036	98267-1038	98267-1040	98267-1042	98267-1044	98267-1046	98267-1048	98267-1050	
34	98267-0510	98267-0512	98267-0514	98267-0516	98267-0518	98267-0520	98267-0522	98267-0524	98267-0526	98267-0528	98267-0530	
35	98267-1052	98267-1054	98267-1056	98267-1058	98267-1060	98267-1062	98267-1064	98267-1066	98267-1068	98267-1070	98267-1072	
36	98267-0532	98267-0534	98267-0536	98267-0538	98267-0540	98267-0542	98267-0544	98267-0546	98267-0548	98267-0550	98267-0552	
37	98267-1074	98267-1076	98267-1078	98267-1080	98267-1082	98267-1084	98267-1086	98267-1088	98267-1090	98267-1092	98267-1094	
38	98267-0554	98267-0556	98267-0558	98267-0560	98267-0562	98267-0564	98267-0566	98267-0568	98267-0570	98267-0572	98267-0574	
39	98267-1096	98267-1098	98267-1100	98267-1102	98267-1104	98267-1106	98267-1108	98267-1110	98267-1112	98267-1114	98267-1116	
40	98267-0576	98267-0578	98267-0580	98267-0582	98267-0584	98267-0586	98267-0588	98267-0590	98267-0592	98267-0594	98267-0596	

1.25mm (.049") Pitch Premo-Flex™ Flat Flex Cable Jumpers

21049
Standard

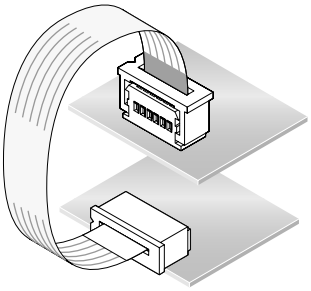

Molex introduces a complete line of 1.25mm (.049") pitch Flat Flex Cable jumpers. These jumpers are used to connect 2 PC boards and terminate to either ZIF or Non-ZIF FFC Connectors.

Molex 1.25mm (.049") Flat Flex Cable jumpers are available in a wide variety of lengths and circuit sizes. These standard lengths are easy to order and feature shorter lead times.

Reference Information
UL Style No.: 2896
Mates With: Any 1.25mm (.049") pitch Molex FFC/FPC connector
Designed In: Millimeters

Electrical
Voltage: 30V
Current: 1.2A

Physical
Strip Length: 5.0mm (.197")
Reinforcement Length: 10.00mm (.394")
Width: (N + 1) 1.25mm
Span: (N - 1) 1.25mm
Margin: 0.85mm (.033")
Conductor Width: 0.80mm (.031")
Conductor Thickness: 0.10mm (.004")
End Thickness: 0.30 ± 0.05mm (.012 ± .002")

Type A FFC Jumpers—Contacts on same side (Preferred version in North America)

Circuits	Order No.											Lead-free
	Overall Length											
	30.00mm (1.181")	51.00mm (2.00")	76.00mm (3.00")	102.00mm (4.00")	127.00mm (5.00")	152.00mm (6.00")	178.00mm (7.00")	203.00mm (8.00")	229.00mm (9.00")	254.00mm (10.00")	305.00mm (12.00")	
4	21049-0701	21049-0703	21049-0705	21049-0707	21049-0709	21049-0711	21049-0713	21049-0715	21049-0717	21049-0719	21049-0721	Yes
5	21049-0723	21049-0725	21049-0727	21049-0729	21049-0731	21049-0733	21049-0735	21049-0737	21049-0739	21049-0741	21049-0743	
6	21049-0101	21049-0103	21049-0105	21049-0107	21049-0109	21049-0111	21049-0113	21049-0115	21049-0117	21049-0119	21049-0121	
7	21049-0745	21049-0747	21049-0749	21049-0751	21049-0753	21049-0755	21049-0757	21049-0759	21049-0761	21049-0763	21049-0765	
8	21049-0123	21049-0125	21049-0127	21049-0129	21049-0131	21049-0133	21049-0135	21049-0137	21049-0139	21049-0141	21049-0143	
9	21049-0767	21049-0769	21049-0771	21049-0773	21049-0775	21049-0777	21049-0779	21049-0781	21049-0783	21049-0785	21049-0787	
10	21049-0145	21049-0147	21049-0149	21049-0151	21049-0153	21049-0155	21049-0157	21049-0159	21049-0161	21049-0163	21049-0165	
11	21049-0789	21049-0791	21049-0793	21049-0795	21049-0797	21049-0799	21049-0801	21049-0803	21049-0805	21049-0807	21049-0809	
12	21049-0167	21049-0169	21049-0171	21049-0173	21049-0175	21049-0177	21049-0179	21049-0181	21049-0183	21049-0185	21049-0187	
13	21049-0811	21049-0813	21049-0815	21049-0817	21049-0819	21049-0821	21049-0823	21049-0825	21049-0827	21049-0829	21049-0831	
14	21049-0189	21049-0191	21049-0193	21049-0195	21049-0197	21049-0199	21049-0201	21049-0203	21049-0205	21049-0207	21049-0209	
15	21049-0833	21049-0835	21049-0837	21049-0839	21049-0841	21049-0843	21049-0845	21049-0847	21049-0849	21049-0851	21049-0853	
16	21049-0211	21049-0213	21049-0215	21049-0217	21049-0219	21049-0221	21049-0223	21049-0225	21049-0227	21049-0229	21049-0231	
17	21049-0855	21049-0857	21049-0859	21049-0861	21049-0863	21049-0865	21049-0867	21049-0869	21049-0871	21049-0873	21049-0875	
18	21049-0233	21049-0235	21049-0237	21049-0239	21049-0241	21049-0243	21049-0245	21049-0247	21049-0249	21049-0251	21049-0253	
19	21049-0877	21049-0879	21049-0881	21049-0883	21049-0885	21049-0887	21049-0889	21049-0891	21049-0893	21049-0895	21049-0897	
20	21049-0255	21049-0257	21049-0259	21049-0261	21049-0263	21049-0265	21049-0267	21049-0269	21049-0271	21049-0273	21049-0275	
21	21049-0899	21049-0901	21049-0903	21049-0905	21049-0907	21049-0909	21049-0911	21049-0913	21049-0915	21049-0917	21049-0919	
22	21049-0277	21049-0279	21049-0281	21049-0283	21049-0285	21049-0287	21049-0289	21049-0291	21049-0293	21049-0295	21049-0297	
23	21049-0921	21049-0923	21049-0925	21049-0927	21049-0929	21049-0931	21049-0933	21049-0935	21049-0937	21049-0939	21049-0941	
24	21049-0299	21049-0301	21049-0303	21049-0305	21049-0307	21049-0309	21049-0311	21049-0313	21049-0315	21049-0317	21049-0319	
25	21049-0943	21049-0945	21049-0947	21049-0949	21049-0951	21049-0953	21049-0955	21049-0957	21049-0959	21049-0961	21049-0963	
26	21049-0321	21049-0323	21049-0325	21049-0327	21049-0329	21049-0331	21049-0333	21049-0335	21049-0337	21049-0339	21049-0341	
27	21049-0965	21049-0967	21049-0969	21049-0971	21049-0973	21049-0975	21049-0977	21049-0979	21049-0981	21049-0983	21049-0985	
28	21049-0343	21049-0345	21049-0347	21049-0349	21049-0351	21049-0353	21049-0355	21049-0357	21049-0359	21049-0361	21049-0363	
29	21049-0987	21049-0989	21049-0991	21049-0993	21049-0995	21049-0997	21049-0999	21049-1001	21049-1003	21049-1005	21049-1007	
30	21049-0365	21049-0367	21049-0369	21049-0371	21049-0373	21049-0375	21049-0377	21049-0379	21049-0381	21049-0383	21049-0385	
31	21049-1009	21049-1011	21049-1013	21049-1015	21049-1017	21049-1019	21049-1021	21049-1023	21049-1025	21049-1027	21049-1029	
32	21049-0387	21049-0389	21049-0391	21049-0393	21049-0395	21049-0397	21049-0399	21049-0401	21049-0403	21049-0405	21049-0407	
33	21049-1031	21049-1033	21049-1035	21049-1037	21049-1039	21049-1041	21049-1043	21049-1045	21049-1047	21049-1049	21049-1051	
34	21049-0409	21049-0411	21049-0413	21049-0415	21049-0417	21049-0419	21049-0421	21049-0423	21049-0425	21049-0427	21049-0429	
35	21049-1053	21049-1055	21049-1057	21049-1059	21049-1061	21049-1063	21049-1065	21049-1067	21049-1069	21049-1071	21049-1073	
36	21049-0431	21049-0433	21049-0435	21049-0437	21049-0439	21049-0441	21049-0443	21049-0445	21049-0447	21049-0449	21049-0451	
37	21049-1075	21049-1077	21049-1079	21049-1081	21049-1083	21049-1085	21049-1087	21049-1089	21049-1091	21049-1093	21049-1095	
38	21049-0453	21049-0455	21049-0457	21049-0459	21049-0461	21049-0463	21049-0465	21049-0467	21049-0469	21049-0471	21049-0473	
39	21049-1097	21049-1099	21049-1101	21049-1103	21049-1105	21049-1107	21049-1109	21049-1111	21049-1113	21049-1115	21049-1117	
40	21049-0475	21049-0477	21049-0479	21049-0481	21049-0483	21049-0485	21049-0487	21049-0489	21049-0491	21049-0493	21049-0495	

Custom jumpers available

1.25mm (.049") Pitch Premo-Flex™ Flat Flex Cable Jumpers

21049
Standard

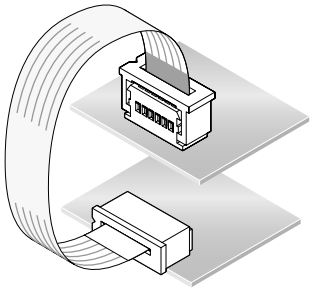

Molex introduces a complete line of 1.25mm (.049") pitch Flat Flex Cable jumpers. These jumpers are used to connect 2 PC boards and terminate to either ZIF or Non-ZIF FFC Connectors.

Molex 1.25mm (.049") Flat Flex Cable jumpers are available in a wide variety of lengths and circuit sizes. These standard lengths are easy to order and feature shorter lead times.

Reference Information

UL Style No.: 2896
Mates With: Any 1.25mm (.049") pitch Molex FFC/FPC connector
Designed In: Millimeters

Electrical

Voltage: 30V
Current: 1.2A

Physical

Strip Length: 5.0mm (.197")
Reinforcement Length: 10.00mm (.394")
Width: (N + 1) 1.25mm
Span: (N - 1) 1.25mm
Margin: 0.85mm (.033")
Conductor Width: 0.80mm (.031")
Conductor Thickness: 0.10mm (.004")
End Thickness: 0.30 ± 0.05mm (.012 ± .002")

Type D FFC Jumpers—Contacts on opposite sides (Preferred version in North America)

Circuits	Order No.											Lead-free
	Overall Length											
	30.00mm (1.181")	51.00mm (2.00")	76.00mm (3.00")	102.00mm (4.00")	127.00mm (5.00")	152.00mm (6.00")	178.00mm (7.00")	203.00mm (8.00")	229.00mm (9.00")	254.00mm (10.00")	305.00mm (12.00")	
4	21049-0700	21049-0702	21049-0704	21049-0706	21049-0708	21049-0710	21049-0712	21049-0714	21049-0716	21049-0718	21049-0720	Yes
5	21049-0722	21049-0724	21049-0726	21049-0728	21049-0730	21049-0732	21049-0734	21049-0736	21049-0738	21049-0740	21049-0742	
6	21049-0102	21049-0104	21049-0106	21049-0108	21049-0110	21049-0112	21049-0114	21049-0116	21049-0118	21049-0120	21049-0122	
7	21049-0744	21049-0746	21049-0748	21049-0750	21049-0752	21049-0754	21049-0756	21049-0758	21049-0760	21049-0762	21049-0764	
8	20149-0124	20149-0126	21049-0128	21049-0130	21049-0132	21049-0134	21049-0136	21049-0138	21049-0140	21049-0142	21049-0144	
9	21049-0766	21049-0768	21049-0770	21049-0772	21049-0774	21049-0776	21049-0778	21049-0780	21049-0782	21049-0784	21049-0786	
10	21049-0146	20149-0148	21049-0150	21049-0152	21049-0154	21049-0156	21049-0158	21049-0160	21049-0162	21049-0164	21049-0166	
11	21049-0788	21049-0790	21049-0792	21049-0794	21049-0796	21049-0798	21049-0800	21049-0802	21049-0804	21049-0806	21049-0808	
12	21049-0168	21049-0170	21049-0172	21049-0174	21049-0176	21049-0178	21049-0180	21049-0182	21049-0184	21049-0186	21049-0188	
13	21049-0810	21049-0812	21049-0814	21049-0816	21049-0818	21049-0820	21049-0822	21049-0824	21049-0826	21049-0828	21049-0830	
14	21049-0190	21049-0192	21049-0194	21049-0196	21049-0198	21049-0200	21049-0202	21049-0204	21049-0206	21049-0208	21049-0210	
15	21049-0832	21049-0834	21049-0836	21049-0838	21049-0840	21049-0842	21049-0844	21049-0846	21049-0848	21049-0850	21049-0852	
16	21049-0212	21049-0214	21049-0216	21049-0218	21049-0220	21049-0222	21049-0224	21049-0226	21049-0228	21049-0230	21049-0232	
17	21049-0854	21049-0856	21049-0858	21049-0860	21049-0862	21049-0864	21049-0866	21049-0868	21049-0870	21049-0872	21049-0874	
18	21049-0234	21049-0236	21049-0238	21049-0240	21049-0242	21049-0244	21049-0246	21049-0248	21049-0250	21049-0252	21049-0254	
19	21049-0876	21049-0878	21049-0880	21049-0882	21049-0884	21049-0886	21049-0888	21049-0890	21049-0892	21049-0894	21049-0896	
20	21049-0256	21049-0258	21049-0260	21049-0262	21049-0264	21049-0266	21049-0268	21049-0270	21049-0272	21049-0274	21049-0276	
21	21049-0898	21049-0900	21049-0902	21049-0904	21049-0906	21049-0908	21049-0910	21049-0912	21049-0914	21049-0916	21049-0918	
22	21049-0278	21049-0280	21049-0282	21049-0284	21049-0286	21049-0288	21049-0290	21049-0292	21049-0294	21049-0296	21049-0298	
23	21049-0920	21049-0922	21049-0924	21049-0926	21049-0928	21049-0930	21049-0932	21049-0934	21049-0936	21049-0938	21049-0940	
24	21049-0300	21049-0302	21049-0304	21049-0306	21049-0308	21049-0310	21049-0312	21049-0314	21049-0316	21049-0318	21049-0320	
25	21049-0942	21049-0944	21049-0946	21049-0948	21049-0950	21049-0952	21049-0954	21049-0956	21049-0958	21049-0960	21049-0962	
26	21049-0322	21049-0324	21049-0326	21049-0328	21049-0330	21049-0332	21049-0334	21049-0336	21049-0338	21049-0340	21049-0342	
27	21049-0964	21049-0966	21049-0968	21049-0970	21049-0972	21049-0974	21049-0976	21049-0978	21049-0980	21049-0982	21049-0984	
28	21049-0344	21049-0346	21049-0348	21049-0350	21049-0352	21049-0354	21049-0356	21049-0358	21049-0360	21049-0362	21049-0364	
29	21049-0986	21049-0988	21049-0990	21049-0992	21049-0994	21049-0996	21049-0998	21049-1000	21049-1002	21049-1004	21049-1006	
30	21049-0366	21049-0368	21049-0370	21049-0372	21049-0374	21049-0376	21049-0378	21049-0380	21049-0382	21049-0384	21049-0386	
31	21049-1008	21049-1010	21049-1012	21049-1014	21049-1016	21049-1018	21049-1020	21049-1022	21049-1024	21049-1026	21049-1028	
32	21049-0388	21049-0390	21049-0392	21049-0394	21049-0396	21049-0398	21049-0400	21049-0402	21049-0404	21049-0406	21049-0408	
33	21049-1030	21049-1032	21049-1034	21049-1036	21049-1038	21049-1040	21049-1042	21049-1044	21049-1046	21049-1048	21049-1050	
34	21049-0410	21049-0412	21049-0414	21049-0416	21049-0418	21049-0420	21049-0422	21049-0424	21049-0426	21049-0428	21049-0430	
35	21049-1052	21049-1054	21049-1056	21049-1058	21049-1060	21049-1062	21049-1064	21049-1066	21049-1068	21049-1070	21049-1072	
36	21049-0432	21049-0434	21049-0436	21049-0438	21049-0440	21049-0442	21049-0444	21049-0446	21049-0448	21049-0450	21049-0452	
37	21049-1074	21049-1076	21049-1078	21049-1080	21049-1082	21049-1084	21049-1086	21049-1088	21049-1090	21049-1092	21049-1094	
38	21049-0454	21049-0456	21049-0458	21049-0460	21049-0462	21049-0464	21049-0466	21049-0468	21049-0470	21049-0472	21049-0474	
39	21049-1096	21049-1098	21049-1100	21049-1102	21049-1104	21049-1106	21049-1108	21049-1110	21049-1112	21049-1114	21049-1116	
40	21049-0476	21049-0478	21049-0480	21049-0482	21049-0484	21049-0486	21049-0488	21049-0490	21049-0492	21049-0494	21049-0496	

Custom jumpers available

1.25mm (.049") Pitch Premo-Flex™ Flat Flex Cable Jumpers

98268
Standard

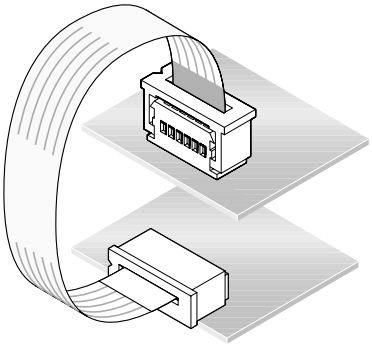

Molex introduces a complete line of 1.25mm (.049") pitch Flat Flex Cable jumpers. These jumpers are used to connect 2 PC boards and terminate to either ZIF or Non-ZIF FFC connectors.

Molex 1.25mm (.049") Flat Flex Cable jumpers are available in a wide variety of lengths and circuit sizes. These standard lengths are easy to order and feature shorter lead times.

We are also able to offer customized lengths and circuit sizes.

Reference Information
Product Specification: PS-98268-001
Packaging: Box
UL Style No.: 20706
Mates With: Any 1.25mm (.049") Pitch Molex FFC/FPC connector
Designed In: Millimeters

Electrical
Voltage: 60V
Current: 1.4A

Physical
Strip Length: 5.0mm (.197")
Reinforcement Length: 10.0mm (.394")
Width: (N + 1) 1.25mm
Span: (N - 1) 1.25mm
Margin: 0.85mm (.033")
Conductor Width: 0.80mm (.031")
Conductor Thickness: 0.10mm (.004")
End Thickness: 0.30 ± 0.05mm (.012 ± .002")

Type A Jumpers—Contacts on same side (Preferred version in Europe)

Circuits	Order No.											Lead-free
	Overall Length											
	30mm (1.81")	51mm (2.00")	76mm (3.00")	102mm (4.00")	127mm (5.00")	152mm (6.00")	178mm (7.00")	203mm (8.00")	229mm (9.00")	254mm (10.00")	305mm (12.00")	
4	98268-0701	98268-0703	98268-0705	98268-0707	98268-0709	98268-0711	98268-0713	98268-0715	98268-0717	98268-0719	98268-0721	
5	98268-0723	98268-0725	98268-0727	98268-0729	98268-0731	98268-0733	98268-0735	98268-0737	98268-0739	98268-0741	98268-0743	
6	98268-0101	98268-0103	98268-0105	98268-0107	98268-0109	98268-0111	98268-0113	98268-0115	98268-0117	98268-0119	98268-0121	
7	98268-0745	98268-0747	98268-0749	98268-0751	98268-0753	98268-0755	98268-0757	98268-0759	98268-0761	98268-0763	98268-0765	
8	98268-0123	98268-0125	98268-0127	98268-0129	98268-0131	98268-0133	98268-0135	98268-0137	98268-0139	98268-0141	98268-0143	
9	98268-0767	98268-0769	98268-0771	98268-0773	98268-0775	98268-0777	98268-0779	98268-0781	98268-0783	98268-0785	98268-0787	
10	98268-0145	98268-0147	98268-0149	98268-0151	98268-0153	98268-0155	98268-0157	98268-0159	98268-0161	98268-0163	98268-0165	
11	98268-0789	98268-0791	98268-0793	98268-0795	98268-0797	98268-0799	98268-0801	98268-0803	98268-0805	98268-0807	98268-0809	
12	98268-0167	98268-0169	98268-0171	98268-0173	98268-0175	98268-0177	98268-0179	98268-0181	98268-0183	98268-0185	98268-0187	
13	98268-0811	98268-0813	98268-0815	98268-0817	98268-0819	98268-0821	98268-0823	98268-0825	98268-0827	98268-0829	98268-0831	
14	98268-0189	98268-0191	98268-0193	98268-0195	98268-0197	98268-0199	98268-0201	98268-0203	98268-0205	98268-0207	98268-0209	
15	98268-0833	98268-0835	98268-0837	98268-0839	98268-0841	98268-0843	98268-0845	98268-0847	98268-0849	98268-0851	98268-0853	
16	98268-0211	98268-0213	98268-0215	98268-0217	98268-0219	98268-0221	98268-0223	98268-0225	98268-0227	98268-0229	98268-0231	
17	98268-0855	98268-0857	98268-0859	98268-0861	98268-0863	98268-0865	98268-0867	98268-0869	98268-0871	98268-0873	98268-0875	
18	98268-0233	98268-0235	98268-0237	98268-0239	98268-0241	98268-0243	98268-0245	98268-0247	98268-0249	98268-0251	98268-0253	
19	98268-0877	98268-0879	98268-0881	98268-0883	98268-0885	98268-0887	98268-0889	98268-0891	98268-0893	98268-0895	98268-0897	
20	98268-0255	98268-0257	98268-0259	98268-0261	98268-0263	98268-0265	98268-0267	98268-0269	98268-0271	98268-0273	98268-0275	
21	98268-0899	98268-0901	98268-0903	98268-0905	98268-0907	98268-0909	98268-0911	98268-0913	98268-0915	98268-0917	98268-0919	
22	98268-0277	98268-0279	98268-0281	98268-0283	98268-0285	98268-0287	98268-0289	98268-0291	98268-0293	98268-0295	98268-0297	Yes
23	98268-0921	98268-0923	98268-0925	98268-0927	98268-0929	98268-0931	98268-0933	98268-0935	98268-0937	98268-0939	98268-0941	
24	98268-0299	98268-0301	98268-0303	98268-0305	98268-0307	98268-0309	98268-0311	98268-0313	98268-0315	98268-0317	98268-0319	
25	98268-0943	98268-0945	98268-0947	98268-0949	98268-0951	98268-0953	98268-0955	98268-0957	98268-0959	98268-0961	98268-0963	
26	98268-0321	98268-0323	98268-0325	98268-0327	98268-0329	98268-0331	98268-0333	98268-0335	98268-0337	98268-0339	98268-0341	
27	98268-0965	98268-0967	98268-0969	98268-0971	98268-0973	98268-0975	98268-0977	98268-0979	98268-0981	98268-0983	98268-0985	
28	98268-0343	98268-0345	98268-0347	98268-0349	98268-0351	98268-0353	98268-0355	98268-0357	98268-0359	98268-0361	98268-0363	
29	98268-0987	98268-0989	98268-0991	98268-0993	98268-0995	98268-0997	98268-0999	98268-1001	98268-1003	98268-1005	98268-1007	
30	98268-0365	98268-0367	98268-0369	98268-0371	98268-0373	98268-0375	98268-0377	98268-0379	98268-0381	98268-0383	98268-0385	
31	98268-1009	98268-1011	98268-1013	98268-1015	98268-1017	98268-1019	98268-1021	98268-1023	98268-1025	98268-1027	98268-1029	
32	98268-0387	98268-0389	98268-0391	98268-0393	98268-0395	98268-0397	98268-0399	98268-0401	98268-0403	98268-0405	98268-0407	
33	98268-1031	98268-1033	98268-1035	98268-1037	98268-1039	98268-1041	98268-1043	98268-1045	98268-1047	98268-1049	98268-1051	
34	98268-0409	98268-0411	98268-0413	98268-0415	98268-0417	98268-0419	98268-0421	98268-0423	98268-0425	98268-0427	98268-0429	
35	98268-1053	98268-1055	98268-1057	98268-1059	98268-1061	98268-1063	98268-1065	98268-1067	98268-1069	98268-1071	98268-1073	
36	98268-0431	98268-0433	98268-0435	98268-0437	98268-0439	98268-0441	98268-0443	98268-0445	98268-0447	98268-0449	98268-0451	
37	98268-1075	98268-1077	98268-1079	98268-1081	98268-1083	98268-1085	98268-1087	98268-1089	98268-1091	98268-1093	98268-1095	
38	98268-0453	98268-0455	98268-0457	98268-0459	98268-0461	98268-0463	98268-0465	98268-0467	98268-0469	98268-0471	98268-0473	
39	98268-1097	98268-1099	98268-1101	98268-1103	98268-1105	98268-1107	98268-1109	98268-1111	98268-1113	98268-1115	98268-1117	
40	98268-0475	98268-0477	98268-0479	98268-0481	98268-0483	98268-0485	98268-0487	98268-0489	98268-0491	98268-0493	98268-0495	

1.25mm (.049") Pitch Premo-Flex™ Flat Flex Cable Jumpers

98268
Standard

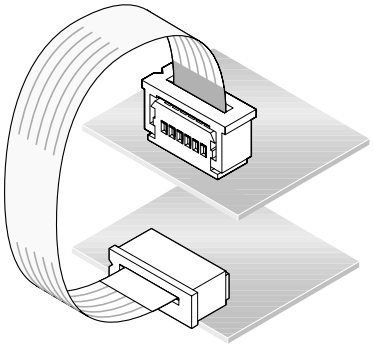

Molex introduces a complete line of 1.25mm (.049") pitch Flat Flex Cable jumpers. These jumpers are used to connect 2 PC boards and terminate to either ZIF or Non-ZIF FFC connectors.

Molex 1.25mm (.049") Flat Flex Cable jumpers are available in a wide variety of lengths and circuit sizes. These standard lengths are easy to order and feature shorter lead times.

We are also able to offer customized lengths and circuit sizes.

Reference Information

Product Specification: PS-98268-001
Packaging: Box
UL Style No.: 20706
Mates With: Any 1.25mm (.049") Pitch Molex FFC/FPC connector
Designed In: Millimeters

Electrical

Voltage: 60V
Current: 1.4A

Physical

Strip Length: 5.0mm (.197")
Reinforcement Length: 10.0mm (.394")
Width: (N + 1) 1.25mm
Span: (N - 1) 1.25mm
Margin: 0.85mm (.033")
Conductor Width: 0.80mm (.031")
Conductor Thickness: 0.10mm (.004")
End Thickness: 0.30 ± 0.05mm (.012 ± .002")

Type D Jumpers—Contacts on opposite side (Preferred version in Europe)

Circuits	Order No.											Lead-free
	Overall Length											
	30mm (1.81")	51mm (2.00")	76mm (3.00")	102mm (4.00")	127mm (5.00")	152mm (6.00")	178mm (7.00")	203mm (8.00")	229mm (9.00")	254mm (10.00")	305mm (12.00")	
4	98268-0700	98268-0702	98268-0704	98268-0706	98268-0708	98268-0710	98268-0712	98268-0714	98268-0716	98268-0718	98268-0720	Yes
5	98268-0722	98268-0724	98268-0726	98268-0728	98268-0730	98268-0732	98268-0734	98268-0736	98268-0738	98268-0740	98268-0742	
6	98268-0102	98268-0104	98268-0106	98268-0108	98268-0110	98268-0112	98268-0114	98268-0116	98268-0118	98268-0120	98268-0122	
7	98268-0744	98268-0746	98268-0748	98268-0750	98268-0752	98268-0754	98268-0756	98268-0758	98268-0760	98268-0762	98268-0764	
8	98268-0124	98268-0126	98268-0128	98268-0130	98268-0132	98268-0134	98268-0136	98268-0138	98268-0140	98268-0142	98268-0144	
9	98268-0766	98268-0768	98268-0770	98268-0772	98268-0774	98268-0776	98268-0778	98268-0780	98268-0782	98268-0784	98268-0786	
10	98268-0146	98268-0148	98268-0150	98268-0152	98268-0154	98268-0156	98268-0158	98268-0160	98268-0162	98268-0164	98268-0166	
11	98268-0788	98268-0790	98268-0792	98268-0794	98268-0796	98268-0798	98268-0800	98268-0802	98268-0804	98268-0806	98268-0808	
12	98268-0168	98268-0170	98268-0172	98268-0174	98268-0176	98268-0178	98268-0180	98268-0182	98268-0184	98268-0186	98268-0188	
13	98268-0810	98268-0812	98268-0814	98268-0816	98268-0818	98268-0820	98268-0822	98268-0824	98268-0826	98268-0828	98268-0830	
14	98268-0190	98268-0192	98268-0194	98268-0196	98268-0198	98268-0200	98268-0202	98268-0204	98268-0206	98268-0208	98268-0210	
15	98268-0832	98268-0834	98268-0836	98268-0838	98268-0840	98268-0842	98268-0844	98268-0846	98268-0848	98268-0850	98268-0852	
16	98268-0212	98268-0214	98268-0216	98268-0218	98268-0220	98268-0222	98268-0224	98268-0226	98268-0228	98268-0230	98268-0232	
17	98268-0854	98268-0856	98268-0858	98268-0860	98268-0862	98268-0864	98268-0866	98268-0868	98268-0870	98268-0872	98268-0874	
18	98268-0234	98268-0236	98268-0238	98268-0240	98268-0242	98268-0244	98268-0246	98268-0248	98268-0250	98268-0252	98268-0254	
19	98268-0876	98268-0878	98268-0880	98268-0882	98268-0884	98268-0886	98268-0888	98268-0890	98268-0892	98268-0894	98268-0896	
20	98268-0256	98268-0258	98268-0260	98268-0262	98268-0264	98268-0266	98268-0268	98268-0270	98268-0272	98268-0274	98268-0276	
21	98268-0898	98268-0900	98268-0902	98268-0904	98268-0906	98268-0908	98268-0910	98268-0912	98268-0914	98268-0916	98268-0918	
22	98268-0278	98268-0280	98268-0282	98268-0284	98268-0286	98268-0288	98268-0290	98268-0292	98268-0294	98268-0296	98268-0298	
23	98268-0920	98268-0922	98268-0924	98268-0926	98268-0928	98268-0930	98268-0932	98268-0934	98268-0936	98268-0938	98268-0940	
24	98268-0300	98268-0302	98268-0304	98268-0306	98268-0308	98268-0310	98268-0312	98268-0314	98268-0316	98268-0318	98268-0320	
25	98268-0942	98268-0944	98268-0946	98268-0948	98268-0950	98268-0952	98268-0954	98268-0956	98268-0958	98268-0960	98268-0962	
26	98268-0322	98268-0324	98268-0326	98268-0328	98268-0330	98268-0332	98268-0334	98268-0336	98268-0338	98268-0340	98268-0342	
27	98268-0964	98268-0966	98268-0968	98268-0970	98268-0972	98268-0974	98268-0976	98268-0978	98268-0980	98268-0982	98268-0984	
28	98268-0344	98268-0346	98268-0348	98268-0350	98268-0352	98268-0354	98268-0356	98268-0358	98268-0360	98268-0362	98268-0364	
29	98268-0986	98268-0988	98268-0990	98268-0992	98268-0994	98268-0996	98268-0998	98268-1000	98268-1002	98268-1004	98268-1006	
30	98268-0366	98268-0368	98268-0370	98268-0372	98268-0374	98268-0376	98268-0378	98268-0380	98268-0382	98268-0384	98268-0386	
31	98268-1008	98268-1010	98268-1012	98268-1014	98268-1016	98268-1018	98268-1020	98268-1022	98268-1024	98268-1026	98268-1028	
32	98268-0388	98268-0390	98268-0392	98268-0394	98268-0396	98268-0398	98268-0400	98268-0402	98268-0404	98268-0406	98268-0408	
33	98268-1030	98268-1032	98268-1034	98268-1036	98268-1038	98268-1040	98268-1042	98268-1044	98268-1046	98268-1048	98268-1050	
34	98268-0410	98268-0412	98268-0414	98268-0416	98268-0418	98268-0420	98268-0422	98268-0424	98268-0426	98268-0428	98268-0430	
35	98268-1052	98268-1054	98268-1056	98268-1058	98268-1060	98268-1062	98268-1064	98268-1066	98268-1068	98268-1070	98268-1072	
36	98268-0432	98268-0434	98268-0436	98268-0438	98268-0440	98268-0442	98268-0444	98268-0446	98268-0448	98268-0450	98268-0452	
37	98268-1074	98268-1076	98268-1078	98268-1080	98268-1082	98268-1084	98268-1086	98268-1088	98268-1090	98268-1092	98268-1094	
38	98268-0454	98268-0456	98268-0458	98268-0460	98268-0462	98268-0464	98268-0466	98268-0468	98268-0470	98268-0472	98268-0474	
39	98268-1096	98268-1098	98268-1100	98268-1102	98268-1104	98268-1106	98268-1108	98268-1110	98268-1112	98268-1114	98268-1116	
40	98268-0476	98268-0478	98268-0480	98268-0482	98268-0484	98268-0486	98268-0488	98268-0490	98268-0492	98268-0494	98268-0496	